Comune di Rivalta di Torino

via Balma 5 - Rivalta di Torino (TO) - 10040

P. IVA / C.F. 01864440019
tel. 011.9045510
www.comune.rivalta.to.it
sportelloperilcittadino@comune.rivalta.to.it / protocollo.rivalta@cert.legalmail.it

REALIZZAZIONE DI NUOVO PADIGLIONE LOCULI ALL'INTERNO DEL 5° CAMPO IN AMPLIAMENTO DEL CIMITERO COMUNALE

PROGETTISTA

TECSE ENGINEERING STUDIO ASSOCIATO
Ing. Franco BETTA - Arch. Alessandro BETTA - Ing. Fabrizio BETTA
C.so MONTE CUCCO, 73 - 10141 - TORINO
tel. (+39) 011 3842231 - fax. (+39) 011389585
www.tecse-engineering.com - info@tecse-engineering.com

Dott. BETTA Ing. FRANCO
ORDINE INGEGNERI
3642 PROVINCIA DI TORINO

ORDINE DEGLI ARCHITETTI, PIANIFICATORI, PAESAGGISTI E CONSERVATORI DELLA PROVINCIA DI TORINO
Arch. Alessandro Betta n° 6022

ORDINE INGEGNERI DELLA PROVINCIA DI TORINO
Dott. Ing. FABRIZIO BETTA n° 9932 F

IL RESPONSABILE DEL PROCEDIMENTO	IL PROGETTISTA	L'IMPRESA	IL DIRETTORE DEI LAVORI

N°	AGGIORNAMENTI	COMPILATORE	CONTROLLORE	DATA
-	EMISSIONE	Ing. Angelo RIZZO	Ing. Fabrizio BETTA	23/03/2018
1				
2				
3				
4				

PROGETTO ESECUTIVO

OPERE STRUTTURALI

RELAZIONE SPECIALISTICA E DI CALCOLO

FILE	COMPILATORE	SCALA	ELABORATO
TS907_ESEC_ST01.pdf	Ing. Angelo RIZZO	* * *	ST01
PROGETTO	CONTROLLORE	DATA	
TS 907	Ing. Fabrizio BETTA	23/03/2018	

Software e Servizi per l'Ingegneria s.r.l.

PRO_SAP

PROfessional Structural Analysis Program

OPERE STRUTTURALI
RELAZIONE DI CALCOLO
ELABORATO ST01

Relazione di calcolo strutturale impostata e redatta secondo le modalità previste nel D.M. 14 Gennaio 2008 cap. 10 “Redazione dei progetti strutturali esecutivi e delle relazioni di calcolo”.

2S.I. Software e Servizi per l'Ingegneria S.r.l.
Via Garibaldi, 90
44121 Ferrara FE (Italy)
Tel. +39 0532 200091 - Fax +39 0532 200086
www.2si.it - info@2si.it

D.M. 14/01/08 cap. 10.2 Affidabilità dei codici utilizzati
http://www.2si.it/software/Affidabilità.htm

INDICE.

1. RELAZIONE DI CALCOLO STRUTTURALE 4
PREMESSA 4
DESCRIZIONE GENERALE DELL'OPERA: 4
QUADRO NORMATIVO DI RIFERIMENTO ADOTTATO 5
PRINCIPI DI MODELLAZIONE 5
MODELLO NUMERICO 6
MODELLAZIONE DELLE AZIONI 8
COMBINAZIONI E/O PERCORSI DI CARICO 8
VERIFICHE AGLI STATI LIMITE ULTIMI 8
VERIFICHE AGLI STATI LIMITE DI ESERCIZIO 8
2. RELAZIONE SUI MATERIALI 8
3. NORMATIVA DI RIFERIMENTO 9
4. DURABILITA' STRUTTURALE 11
5. CARATTERISTICHE MATERIALI UTILIZZATI 14
6. MODELLAZIONE DELLE SEZIONI 21
7. MODELLAZIONE STRUTTURA: NODI 22
8. MODELLAZIONE STRUTTURA: ELEMENTI TRAVE 28
9. MODELLAZIONE STRUTTURA: ELEMENTI SHELL 29
10. MODELLAZIONE DELLE AZIONI 44
11. SCHEMATIZZAZIONE DEI CASI DI CARICO 46
12. DEFINIZIONE DELLE COMBINAZIONI 48
13. AZIONE SISMICA 53
14. RISULTATI ANALISI SISMICHE 54
15. RISULTATI OPERE DI FONDAZIONE 64
16. VERIFICA ELEMENTI PARETE E GUSCIO IN C.A. 82
Progettazione delle fondazioni 83
17. VERIFICHE PER ELEMENTI IN ACCIAIO 110
18. STATI LIMITE D' ESERCIZIO 113
19. CONCLUSIONI E SCHEMI GRAFICI 132

1. RELAZIONE DI CALCOLO STRUTTURALE

PREMESSA

Le presenti relazioni di calcolo strutturale, riunite in un unico elaborato, in conformità al §10.1 del DM 14/01/08, sono comprensive di descrizioni generale delle opere e dei criteri generali di analisi e verifica. Segue inoltre le indicazioni fornite al §10.2 del DM stesso per quanto concerne analisi e verifiche svolte con l'ausilio di codici di calcolo.

Nella presente parte sono riportati i principali elementi di inquadramento del progetto esecutivo riguardante le strutture, in relazione agli strumenti urbanistici, al progetto architettonico, al progetto delle componenti tecnologiche in generale ed alle prestazioni attese dalla struttura.

DESCRIZIONE GENERALE DELL'OPERA:

Descrizione generale dell'opera	
Opera strutturale	Struttura portante per alloggiamento Loculi
Ubicazione	Comune di RIVALTA DI TORINO (TO) (Regione PIEMONTE)
	Località RIVALTA DI TORINO (TO)
	Longitudine 7.524, Latitudine 45.032
Numero di piani	Fuori terra: 1
	Interrati: -
	le dimensioni dell'opera in pianta sono racchiuse in un rettangolo di circa 26,70 x 7,20m.
Tipo di fondazione	Diretta - platea di fondazione

Principali caratteristiche della struttura	
Struttura regolare in pianta	NO
Struttura regolare in altezza	SI
Classe di duttilità	B
Travi: ricalate o in spessore	SI (CORDOLO)
Pilastri	SI
Pilastri in falso	NO
Tipo di fondazione	DIRETTA - PLATEA
Condizioni per cui è necessario considerare la componente verticale del sisma	NO

Parametri della struttura			
Classe d'uso	Vita Vn [anni]	Coeff. Uso	Periodo Vr [anni]
III	100	1.50	150

Fattore di struttura
Calcolo del Fattore di struttura q per nuova struttura **Valore fattore di struttura q da utilizzare: 2,00**

QUADRO NORMATIVO DI RIFERIMENTO ADOTTATO

Le norme ed i documenti assunti quale riferimento per la progettazione strutturale vengono indicati di seguito.
Nel capitolo "normativa di riferimento" è comunque presente l'elenco completo delle normative disponibili.

Progetto-verifica degli elementi	
Progetto cemento armato	D.M. 14-01-2008
Progetto acciaio	D.M. 14-01-2008
Progetto legno	D.M. 14-01-2008
Progetto muratura	D.M. 14-01-2008
Azione sismica	
Norma applicata per l' azione sismica	D.M. 14-01-2008

PRINCIPI DI MODELLAZIONE

Nel prosieguo si indicano tipo di analisi strutturale condotta (statico,dinamico, lineare o non lineare) e il metodo adottato per la risoluzione del problema strutturale nonché le metodologie seguite per la verifica o per il progetto-verifica delle sezioni. Si riportano le combinazioni di carico adottate e, nel caso di calcoli non lineari, i percorsi di carico seguiti; le configurazioni studiate per la struttura in esame ***sono risultate effettivamente esaustive per la progettazione-verifica.***
La verifica della sicurezza degli elementi strutturali avviene con i metodi della scienza delle costruzioni. L'analisi strutturale è condotta con il metodo degli spostamenti per la valutazione dello stato tensodeformativo indotto da carichi statici. L'analisi strutturale è condotta con il metodo dell'analisi modale e dello spettro di risposta in termini di accelerazione per la valutazione dello stato tensodeformativo indotto da carichi dinamici (tra cui quelli di tipo sismico).
L'analisi strutturale viene effettuata con il metodo degli elementi finiti. Il metodo sopraindicato si basa sulla schematizzazione della struttura in elementi connessi solo in corrispondenza di un numero prefissato di punti denominati nodi. I nodi sono definiti dalle tre coordinate cartesiane in un sistema di riferimento globale. Le incognite del problema (nell'ambito del metodo degli spostamenti) sono le componenti di spostamento dei nodi riferite al sistema di riferimento globale (traslazioni secondo X, Y, Z, rotazioni attorno X, Y, Z). La soluzione del problema si ottiene con un sistema di equazioni algebriche lineari i cui termini noti sono costituiti dai carichi agenti sulla struttura opportunamente concentrati ai nodi:

K * **u** = **F** dove **K** = matrice di rigidezza
u = vettore spostamenti nodali
F = vettore forze nodali

Dagli spostamenti ottenuti con la risoluzione del sistema vengono quindi dedotte le sollecitazioni e/o le tensioni di ogni elemento, riferite generalmente ad una terna locale all'elemento stesso.
Il sistema di riferimento utilizzato è costituito da una terna cartesiana destrorsa XYZ. Si assume l'asse Z verticale ed orientato verso l'alto.

Gli elementi utilizzati per la modellazione dello schema statico della struttura sono i seguenti:
- Elemento tipo ***TRUSS*** (biella-D2)
- Elemento tipo ***BEAM*** (trave-D2)
- Elemento tipo ***MEMBRANE*** (membrana-D3)
- Elemento tipo ***PLATE*** (piastra-guscio-D3)
- Elemento tipo ***BOUNDARY*** (molla)
- Elemento tipo ***STIFFNESS*** (matrice di rigidezza)
- Elemento tipo ***BRICK*** (elemento solido)
- Elemento tipo ***SOLAIO*** (macro elemento composto da più membrane)

MODELLO NUMERICO

In questa parte verrà illustrato il modello numerico utilizzato per l'analisi della struttura.
La presentazione delle informazioni deve essere, coerentemente con le prescrizioni del paragrafo 10.2 delle NTC-08, tale da garantirne la leggibilità, la corretta interpretazione e la riproducibilità.

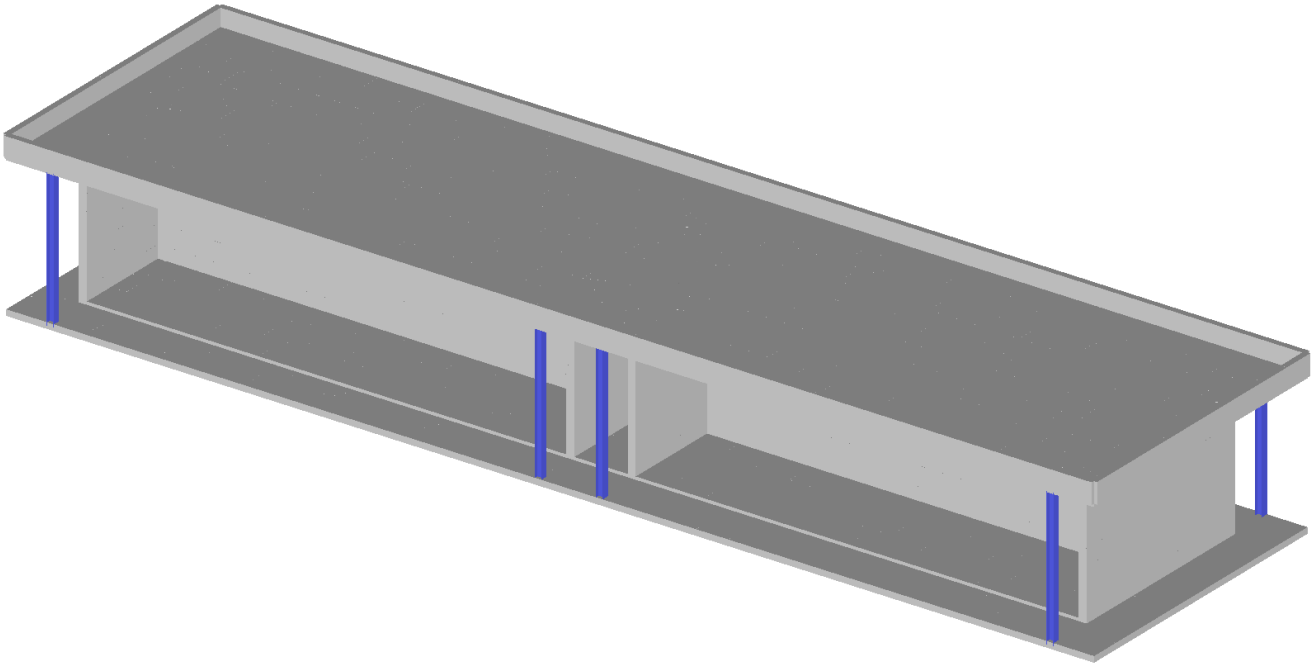

Figura 1.1 - Vista solida modello F.E.M.

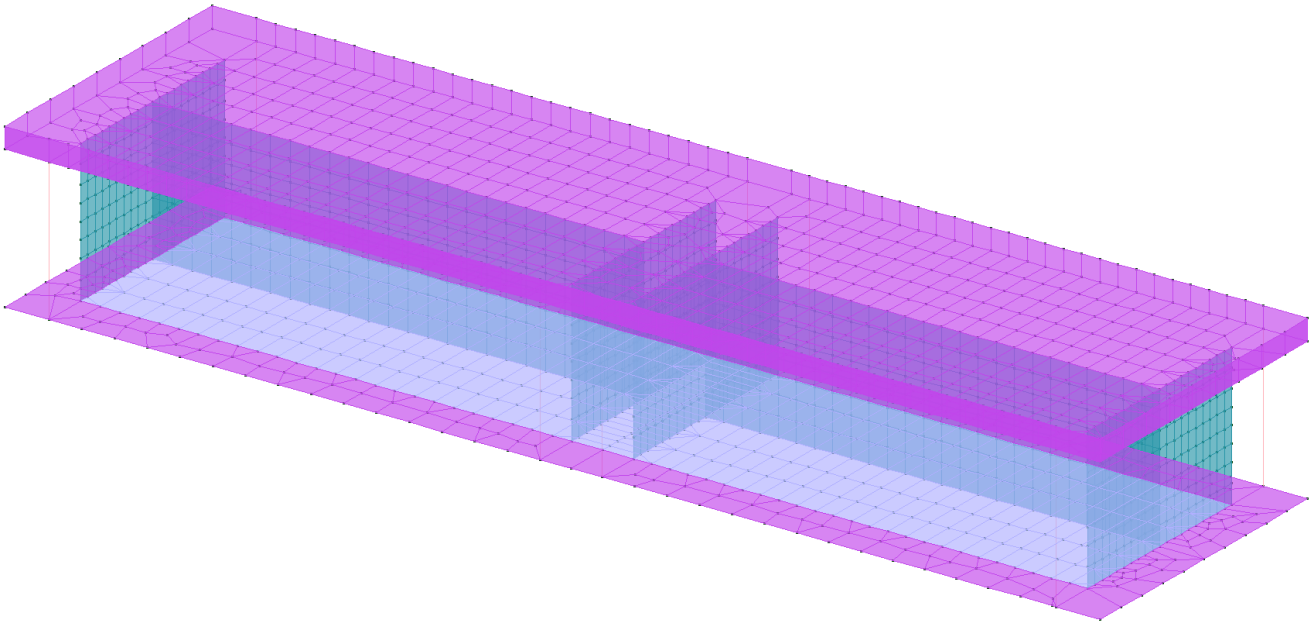

Figura 1.2 - Vista ai fili fissi modello F.E.M.

Tipo di analisi strutturale	
Statica lineare	SI
Statica non lineare	NO
Sismica statica lineare	NO
Sismica dinamica lineare	SI
Sismica statica non lineare (prop. masse)	NO
Sismica statica non lineare (prop. modo)	NO
Sismica statica non lineare (triangolare)	NO
Non linearità geometriche (fattore P delta)	NO

Di seguito si indicano l'origine e le caratteristiche dei codici di calcolo utilizzati riportando titolo, produttore e distributore, versione, estremi della licenza d'uso:

Informazioni sul codice di calcolo	
Titolo:	PRO_SAP PROfessional Structural Analysis Program
Versione:	PROFESSIONAL (build2015-12-173)
Produttore-Distributore:	2S.I. Software e Servizi per l'Ingegneria s.r.l., Ferrara
Dati utente finale:	TECSE ENGINEERING STUDIO ASSOCIATO
Codice Licenza:	Licenza dsi2962

Un attento esame preliminare della documentazione a corredo del software ***ha consentito di valutarne l'affidabilità e soprattutto l'idoneità al caso specifico***. La documentazione, fornita dal produttore e distributore del software, contiene una esauriente descrizione delle basi teoriche e degli algoritmi impiegati, l'individuazione dei campi d'impiego, nonché casi prova interamente risolti e commentati, corredati dei file di input necessari a riprodurre l'elaborazione:

Affidabilità dei codici utilizzati
2S.I. ha verificato l'affidabilità e la robustezza del codice di calcolo attraverso un numero significativo di casi prova in cui i risultati dell'analisi numerica sono stati confrontati con soluzioni teoriche. E' possibile reperire la documentazione contenente alcuni dei più significativi casi trattati al seguente link: http://www.2si.it/Software/Affidabilità.htm

Modellazione della geometria e proprietà meccaniche:	
nodi	2396
elementi D2 (per aste, travi, pilastri…)	8
elementi D3 (per pareti, platee, gusci…)	2492
elementi solaio	0
elementi solidi	0
Dimensione del modello strutturale [cm]:	
X min =	-0.00
Xmax =	720.00
Ymin =	2.70
Ymax =	2668.55
Zmin =	0.00
Zmax =	393.00
Strutture verticali:	
Elementi di tipo asta	NO
Pilastri	NO
Pareti	SI
Setti (a comportamento membranale)	NO
Strutture non verticali:	
Elementi di tipo asta	NO
Travi	NO
Gusci	SI
Membrane	NO
Orizzontamenti:	

Solai con la proprietà piano rigido	NO
Solai senza la proprietà piano rigido	NO
Tipo di vincoli:	
Nodi vincolati rigidamente	NO
Nodi vincolati elasticamente	NO
Nodi con isolatori sismici	NO
Fondazioni puntuali (plinti/plinti su palo)	NO
Fondazioni di tipo trave	NO
Fondazioni di tipo platea	SI
Fondazioni con elementi solidi	NO

MODELLAZIONE DELLE AZIONI

Si veda il capitolo **"Schematizzazione dei casi di carico"** per le informazioni necessarie alla comprensione ed alla ricostruzione delle azioni applicate al modello numerico, coerentemente con quanto indicato nella parte "*2.6. Azioni di progetto sulla costruzione*".

COMBINAZIONI E/O PERCORSI DI CARICO

Si veda il capitolo **"Definizione delle combinazioni"** in cui sono indicate le combinazioni di carico adottate e, nel caso di calcoli non lineari, i percorsi di carico seguiti.

Combinazioni dei casi di carico	
APPROCCIO PROGETTUALE	Approccio 2
Tensioni ammissibili	NO
SLU	SI
SLV (SLU con sisma)	SI
SLC	NO
SLD	SI
SLO	NO
SLU GEO A2 (per approccio 1)	NO
SLU EQU	NO
Combinazione caratteristica (rara)	SI
Combinazione frequente	SI
Combinazione quasi permanente (SLE)	SI
SLA (accidentale quale incendio)	NO

VERIFICHE AGLI STATI LIMITE ULTIMI

Nel capitolo relativo alla progettazione degli elementi strutturali agli SLU vengono indicate, con riferimento alla normativa adottata, le modalità ed i criteri seguiti per valutare la sicurezza della struttura nei confronti delle possibili situazioni di crisi ed i risultati delle valutazioni svolte. In via generale, oltre alle verifiche di resistenza e di spostamento, devono essere prese in considerazione verifiche nei confronti dei fenomeni di instabilità, locale e globale, di fatica, di duttilità, di degrado.

VERIFICHE AGLI STATI LIMITE DI ESERCIZIO

Nel capitolo relativo alla progettazione degli elementi strutturali agli SLU vengono indicate, con riferimento alla normativa adottata, le modalità seguite per valutare l'affidabilità della struttura nei confronti delle possibili situazioni di perdita di funzionalità (per eccessive deformazioni, fessurazioni, vibrazioni, etc.) ed i risultati delle valutazioni svolte.

2. RELAZIONE SUI MATERIALI

Il capitolo Materiali riportata informazioni esaustive relative all'elenco dei materiali impiegati e loro modalità di posa in opera e ai valori di calcolo.

3. NORMATIVA DI RIFERIMENTO

D.Min. Infrastrutture Min. Interni e Prot. Civile 14 Gennaio 2008 e allegate "Norme tecniche per le costruzioni".
D.Min. Infrastrutture e trasporti 14 Settembre 2005 e allegate "Norme tecniche per le costruzioni".
D.M. LL.PP. 9 Gennaio 1996 "Norme tecniche per il calcolo, l'esecuzione ed il collaudo delle strutture in cemento armato, normale e precompresso e per le strutture metalliche".
D.M. LL.PP. 16 Gennaio 1996 "Norme tecniche relative ai <<Criteri generali per la verifica di sicurezza delle costruzioni e dei carichi e sovraccarichi>>".
D.M. LL.PP. 16 Gennaio 1996 "Norme tecniche per le costruzioni in zone sismiche".
Circolare 4/07/96, n.156AA.GG./STC. istruzioni per l'applicazione delle "Norme tecniche relative ai <<Criteri generali per la verifica di sicurezza delle costruzioni e dei carichi e sovraccarichi>>" di cui al D.M. 16/01/96.
Circolare 10/04/97, n.65AA.GG. istruzioni per l'applicazione delle "Norme tecniche per le costruzioni in zone sismiche" di cui al D.M. 16/01/96.
D.M. LL.PP. 20 Novembre 1987 "Norme tecniche per la progettazione, esecuzione e collaudo degli edifici in muratura e per il loro consolidamento".
Circolare 4 Gennaio 1989 n. 30787 “Istruzioni in merito alle norme tecniche per la progettazione, esecuzione e collaudo degli edifici in muratura e per il loro consolidamento”.
D.M. LL.PP. 11 Marzo 1988 “Norme tecniche riguardanti le indagini sui terreni e sulle rocce, la stabilità dei pendii naturali e delle scarpate, i criteri generali e le prescrizioni per la progettazione, l'esecuzione e il collaudo delle opere di sostegno delle terre e delle opere di fondazione”.
D.M. LL.PP. 3 Dicembre 1987 “Norme tecniche per la progettazione, esecuzione e collaudo delle costruzioni prefabbricate”.
UNI 9502 - Procedimento analitico per valutare la resistenza al fuoco degli elementi costruttivi di conglomerato cementizio armato, normale e precompresso - edizione maggio 2001
Ordinanza del Presidente del Consiglio dei Ministri n. 3274 del 20 marzo 2003 “Primi elementi in materia di criteri generali per la classificazione sismica del territorio nazionale e di normative tecniche per le costruzioni in zona sismica” e successive modificazioni e integrazioni.
UNI EN 1990:2006 13/04/2006 Eurocodice 0 - Criteri generali di progettazione strutturale.
UNI EN 1991-1-1:2004 01/08/2004 Eurocodice 1 - Azioni sulle strutture - Parte 1-1: Azioni in generale - Pesi per unità di volume, pesi propri e sovraccarichi per gli edifici.
UNI EN 1991-2:2005 01/03/2005 Eurocodice 1 - Azioni sulle strutture - Parte 2: Carichi da traffico sui ponti.
UNI EN 1991-1-3:2004 01/10/2004 Eurocodice 1 - Azioni sulle strutture - Parte 1-3: Azioni in generale - Carichi da neve.
UNI EN 1991-1-4:2005 01/07/2005 Eurocodice 1 - Azioni sulle strutture - Parte 1-4: Azioni in generale - Azioni del vento.
UNI EN 1991-1-5:2004 01/10/2004 Eurocodice 1 - Azioni sulle strutture - Parte 1-5: Azioni in generale - Azioni termiche.
UNI EN 1992-1-1:2005 24/11/2005 Eurocodice 2 - Progettazione delle strutture di calcestruzzo - Parte 1-1: Regole generali e regole per gli edifici.
UNI EN 1992-1-2:2005 01/04/2005 Eurocodice 2 - Progettazione delle strutture di calcestruzzo - Parte 1-2: Regole generali - Progettazione strutturale contro l'incendio.
UNI EN 1993-1-1:2005 01/08/2005 Eurocodice 3 - Progettazione delle strutture di acciaio - Parte 1-1: Regole generali e regole per gli edifici.
UNI EN 1993-1-8:2005 01/08/2005 Eurocodice 3 - Progettazione delle strutture di acciaio - Parte 1-8: Progettazione dei collegamenti.
UNI EN 1994-1-1:2005 01/03/2005 Eurocodice 4 - Progettazione delle strutture composte acciaio-calcestruzzo - Parte 1-1: Regole generali e regole per gli edifici.
UNI EN 1994-2:2006 12/01/2006 Eurocodice 4 - Progettazione delle strutture composte acciaio-calcestruzzo - Parte 2: Regole generali e regole per i ponti.
UNI EN 1995-1-1:2005 01/02/2005 Eurocodice 5 - Progettazione delle strutture di legno - Parte 1-1: Regole generali – Regole comuni e regole per gli edifici.
UNI EN 1995-2:2005 01/01/2005 Eurocodice 5 - Progettazione delle strutture di legno - Parte 2: Ponti.

UNI EN 1996-1-1:2006 26/01/2006 Eurocodice 6 - Progettazione delle strutture di muratura - Parte 1-1: Regole generali per strutture di muratura armata e non armata.
UNI EN 1996-3:2006 09/03/2006 Eurocodice 6 - Progettazione delle strutture di muratura - Parte 3: Metodi di calcolo semplificato per strutture di muratura non armata.
UNI EN 1997-1:2005 01/02/2005 Eurocodice 7 - Progettazione geotecnica - Parte 1: Regole generali.
UNI EN 1998-1:2005 01/03/2005 Eurocodice 8 - Progettazione delle strutture per la resistenza sismica - Parte 1: Regole generali, azioni sismiche e regole per gli edifici.
UNI EN 1998-3:2005 01/08/2005 Eurocodice 8 - Progettazione delle strutture per la resistenza sismica - Parte 3: Valutazione e adeguamento degli edifici.
UNI EN 1998-5:2005 01/01/2005 Eurocodice 8 - Progettazione delle strutture per la resistenza sismica - Parte 5: Fondazioni, strutture di contenimento ed aspetti geotecnici.
NOTA sul capitolo "normativa di riferimento": riporta l' elenco delle normative implementate nel software. Le norme utilizzate per la struttura oggetto della presente relazione sono indicate nel precedente capitolo "RELAZIONE DI CALCOLO STRUTTURALE" "ANALISI E VERIFICHE SVOLTE CON L'AUSILIO DI CODICI DI CALCOLO". Laddove nei capitoli successivi vengano richiamate norme antecedenti al DM 14.01.08 è dovuto o a progettazione simulata di edifico esistente o ad applicazione del punto 2.7 del DM 14.01.08

4. DURABILITA' STRUTTURALE

Classe di esposizione ambientale	Copriferro $c_{min,dur}$ [mm]							
	15	25	30	35	40	45	50	55
XC1		C25/30, 0.60, 300						
XC2				C25/30, 0.60, 300				
XC3				C28/35, 0.55, 320				
XC4					C32/40, 0.50, 340			
XD1						C28/35, 0.55, 320		
XD2							C35/45, 0.45, 360	
XD3								C35/45, 0.45, 360
XS1						C28/35, 0.55, 320		
XS2							C35/45, 0.45, 360	
XS3								C35/45, 0.45, 360
XF1	C28/35, 0,50, 320							
XF2 – XF3	C25/30, 0,50, 340							
XF4	C28/35, 0,45, 360							
XA1	C28/35, 0,55, 320							
XA2	C32/40, 0,50, 340							
XA3	C35/45, 0,45, 360							

50 anni

100 anni

$$c_{nom} = \max(c_{min,b}, c_{min,dur}) + 10 \ (mm) \geq 20 \ mm$$

$c_{min,b} = \phi\sqrt{n_b}$ n_b numero di barre di un eventuale gruppo di barre; per barra singola $n_b = 1$.

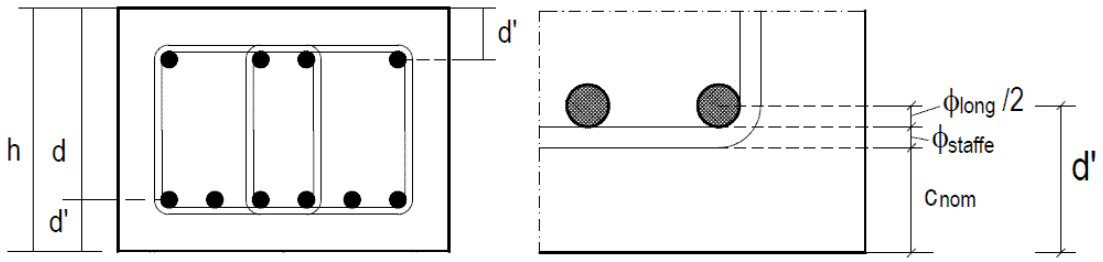

Altezze d e d'

1 Nessun rischio di corrosione o di attacco		
X0	Calcestruzzo privo di armatura o inserti metallici: tutte le esposizioni eccetto dove c'è gelo/disgelo, abrasione o attacco chimico. Calcestruzzo con armatura o inserti metallici molto asciutto.	Calcestruzzo all'interno di edifici con umidità dell'aria molto bassa.
2 Corrosione indotta da carbonatazione		
XC1	Asciutto o permanentemente bagnato	Calcestruzzo all'interno di edifici con bassa umidità relativa. Calcestruzzo costantemente immerso in acqua
XC2	Bagnato, raramente asciutto	Superfici di calcestruzzo a contatto con acqua per lungo tempo. Molte fondazioni
XC3	Umidità moderata	Calcestruzzo all'interno di edifici con umidità dell'aria moderata oppure elevata. Calcestruzzo esposto all'esterno protetto dalla pioggia
XC4	Ciclicamente bagnato e asciutto	Superfici di calcestruzzo soggette al contatto con acqua, non nella classe di esposizione XC2
3 Corrosione indotta da cloruri		
XD1	Umidità moderata	Superfici di calcestruzzo esposte a nebbia salina
XD2	Bagnato, raramente asciutto	Piscine. Calcestruzzo esposto ad acque industriali contenenti cloruri
XD3	Ciclicamente bagnato ed asciutto	Parti di ponti esposte a spruzzi contenenti cloruri Pavimentazioni stradali e di parcheggi
4 Corrosione indotta da cloruri presenti nell'acqua di mare		
XS1	Esposto a nebbia salina ma non in contatto diretto con acqua di mare	Strutture prossime oppure sulla costa
XS2	Permanentemente sommerso	Parti di strutture marine
XS3	Zone esposte alle onde, agli spruzzi oppure alle maree	Parti di strutture marine
5 Attacco di cicli gelo/disgelo		
XF1	Moderata saturazione d'acqua, senza impiego di agente antigelo	Superfici verticali di calcestruzzo esposte alla pioggia e al gelo
XF2	Moderata saturazione d'acqua, con uso di agente antigelo	Superfici verticali di calcestruzzo di strutture stradali esposte al gelo e nebbia di agenti antigelo
XF3	Elevata saturazione d'acqua, senza antigelo	Superfici orizzontali di calcestruzzo esposte alla pioggia e al gelo
XF4	Elevata saturazione d'acqua, con antigelo oppure acqua di mare	Strade e impalcati da ponte esposti agli agenti antigelo Superfici di calcestruzzo esposte direttamente a nebbia contenente agenti antigelo e al gelo
6. Attacco chimico		
XA1	Ambiente chimico debolmente aggressivo	Suoli naturali ed acqua del terreno
XA2	Ambiente chimico moderatamente aggressivo	Suoli naturali ed acqua del terreno
XA3	Ambiente chimico fortemente aggressivo	Suoli naturali ed acqua del terreno

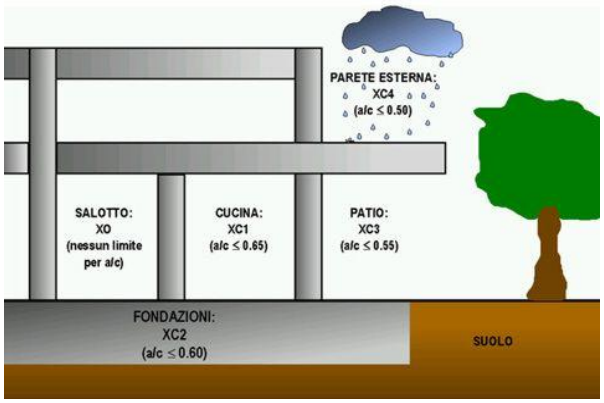

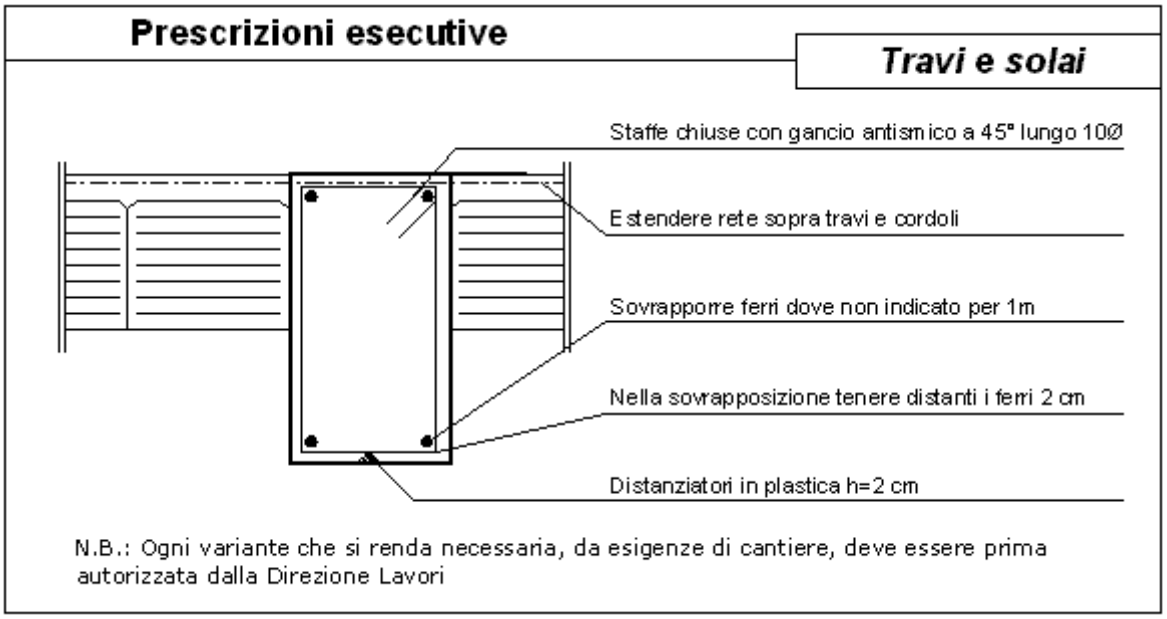

Sovrapporre i ferri nelle riprese per almeno 60 diametri ;
Impiegare distanziatori in plastica o pasta di cemento per garantire un copriferro (misurato dall'esterno ferro e non dal baricentro ferro) di almeno cm 2,5 per le travi e cm 3 per i pilastri (a meno di prescrizioni superiori per esigenze di REI) ;
Estendere la rete nella soletta dei solai fino all'esterno cordolo o travi ;
Sovrapporre le reti di cui sopra per almeno cm 20 ;
Ancorare i ferri aggiuntivi superiori dei solai all'esterno delle travi di bordo, curando di tenere il baricentro a circa 2.5 cm dal filo superiore del getto della caldana del solaio ;
Nella giunzione per sovrapposizione dei ferri, non legare i due ferri fra loro, ma tenerli distanziati di almeno cm 2 (interferro).

5. CARATTERISTICHE MATERIALI UTILIZZATI

Il programma consente l'uso di materiali diversi. Sono previsti i seguenti tipi di materiale:

1	*materiale tipo cemento armato*
2	*materiale tipo acciaio*
3	*materiale tipo muratura*
4	*materiale tipo legno*
5	*materiale tipo generico*

I materiali utilizzati nella modellazione sono individuati da una sigla identificativa ed un codice numerico (gli elementi strutturali richiamano quest'ultimo nella propria descrizione). Per ogni materiale vengono riportati in tabella i seguenti dati:

Young	*modulo di elasticità normale*
Poisson	*coefficiente di contrazione trasversale*
G	*modulo di elasticità tangenziale*
Gamma	*peso specifico*
Alfa	*coefficiente di dilatazione termica*

I dati soprariportati vengono utilizzati per la modellazione dello schema statico e per la determinazione dei carichi inerziali e termici. In relazione al tipo di materiale vengono riportati inoltre:

1	*cemento armato*		
		Rck	*resistenza caratteristica cubica*
		Fctm	*resistenza media a trazione semplice*
2	*acciaio*		
		Ft	*tensione di rottura a trazione*
		Fy	*tensione di snervamento*
		Fd	*resistenza di calcolo*
		Fdt	*resistenza di calcolo per spess. t>40 mm*
		Sadm	*tensione ammissibile*
		Sadmt	*tensione ammissibile per spess. t>40 mm*
3	*muratura*		
		Resist. Fk	*resistenza caratteristica a compressione*
		Resist. Fvko	*resistenza caratteristica a taglio*
4	*legno*		
		Resist. fc0k	*Resistenza caratteristica (tensione amm. per REGLES) per compressione*
		Resist. ft0k	*Resistenza caratteristica (tensione amm. per REGLES) per trazione*
		Resist. fmk	*Resistenza caratteristica (tensione amm. per REGLES) per flessione*
		Resist. fvk	*Resistenza caratteristica (tensione amm. per REGLES) per taglio*
		Modulo E0,05	*Modulo elastico parallelo caratteristico*
		Lamellare	*lamellare o massiccio*

Vengono inoltre riportate le tabelle conteneti il riassunto delle nformazioni assegnate nei criteri di progetto in uso.

Id	Tipo / Note		Young	Poisson	G	Gamma	Alfa
		N/mm2	N/mm2		N/mm2	N/mm3	
3	Calcestruzzo Classe C28/35		3.260e+04	0.20	1.358e+04	2.50e-05	1.00e-05
	Rck	35.0					
	fctm	2.8					
11	acciaio Fe430 - S275		2.100e+05	0.30	8.077e+04	7.80e-05	1.20e-05
	ft	430.0					
	fy	275.0					
	fd	275.0					
	fdt	250.0					
	sadm	190.0					
	sadmt	170.0					

Aste acc.	1/7/..	2/8/..	3/9/..	4/10/..	5/11/..	6/12/..
Generalità						
Beta assegnato	0.80	0.80	0.80	0.80	0.80	0.80
Verifica come controvento	No	No	No	No	No	No
Usa condizioni I e II	Si	Si	Si	Si	Si	Si
Coefficiente gamma M0	1.05	1.05	1.05	1.05	1.05	1.05
Coefficiente gamma M1	1.05	1.05	1.05	1.05	1.05	1.05
Coefficiente gamma M2	1.25	1.25	1.25	1.25	1.25	1.25

Pilastri acc.	1/7/..	2/8/..	3/9/..	4/10/..	5/11/..	6/12/..
Lunghezze libere						
Metodo di calcolo 2-2	Assegnato	Assegnato	Assegnato	Assegnato	Assegnato	Assegnato
2-2 Beta assegnato	2.00	2.00	2.00	2.00	2.00	2.00
2-2 Beta * L assegnato [cm]	0.0	0.0	0.0	0.0	0.0	0.0
Metodo di calcolo 3-3	Assegnato	Assegnato	Assegnato	Assegnato	Assegnato	Assegnato
3-3 Beta assegnato	2.00	2.00	2.00	2.00	2.00	2.00
3-3 Beta * L assegnato [cm]	0.0	0.0	0.0	0.0	0.0	0.0
1-1 Beta assegnato	1.00	1.00	1.00	1.00	1.00	1.00
1-1 Beta * L assegnato [cm]	0.0	0.0	0.0	0.0	0.0	0.0
Generalità						
Coefficiente gamma M0	1.05	1.05	1.05	1.05	1.05	1.05
Coefficiente gamma M1	1.05	1.05	1.05	1.05	1.05	1.05
Coefficiente gamma M2	1.25	1.25	1.25	1.25	1.25	1.25
Effetti del 2 ordine	Si	Si	Si	Si	Si	Si
Momenti equivalenti	Si	Si	Si	Si	Si	Si
Usa condizioni I e II	Si	Si	Si	Si	Si	Si

Travi acc.	1/7/..	2/8/..	3/9/..	4/10/..	5/11/..	6/12/..
Lunghezze libere						
3-3 Beta * L automatico	Si	Si	Si	Si	Si	Si
3-3 Beta assegnato	1.00	1.00	1.00	1.00	1.00	1.00
3-3 Beta assegnato [cm]	0.0	0.0	0.0	0.0	0.0	0.0
2-2 Beta * L automatico	Si	Si	Si	Si	Si	Si
2-2 Beta assegnato	1.00	1.00	1.00	1.00	1.00	1.00
2-2 Beta * L assegnato [cm]	0.0	0.0	0.0	0.0	0.0	0.0
1-1 Beta * L automatico	Si	Si	Si	Si	Si	Si
1-1 Beta assegnato	1.00	1.00	1.00	1.00	1.00	1.00
1-1 Beta * L assegnato [cm	0.0	0.0	0.0	0.0	0.0	0.0

Travi acc.	1/7/..	2/8/..	3/9/..	4/10/..	5/11/..	6/12/..
]						
Generalità						
Coefficiente gamma M0	1.05	1.05	1.05	1.05	1.05	1.05
Coefficiente gamma M1	1.05	1.05	1.05	1.05	1.05	1.05
Coefficiente gamma M2	1.25	1.25	1.25	1.25	1.25	1.25
Luce di taglio per GR [cm]	1.00	1.00	1.00	1.00	1.00	1.00
Usa condizioni I e II	Si	Si	Si	Si	Si	Si
Momenti equivalenti	Si	Si	Si	Si	Si	Si

Pareti c.a.	1/7/..	2/8/..	3/9/..	4/10/..	5/11/..	6/12/..
Generalità						
Progetto armatura	Composto con parete sismica	Composto con parete sismica	Composto con parete sismica	Composto con parete sismica	Composto con parete sismica	Singolo elemento
Armatura						
Inclinazione Av [gradi]	90.00	90.00	90.00	90.00	90.00	90.00
Angolo Av-Ao [gradi]	90.00	90.00	90.00	90.00	90.00	90.00
Minima tesa	0.25	0.25	0.25	0.25	0.25	0.25
Massima tesa	4.00	4.00	4.00	4.00	4.00	4.00
Maglia unica centrale	No	No	No	No	No	No
Unico strato verticale	No	No	No	No	No	No
Unico strato orizzontale	No	No	No	No	No	No
Copriferro [cm]	3.00	4.00	4.00	3.00	3.00	2.00
Maglia V						
diametro	12	14	12	14	8	8
passo	15	15	15	15	15	5
diametro aggiuntivi	12	14	12	14	8	8
Maglia O						
diametro	10	14	10	12	12	12
passo	15	15	15	15	15	5
diametro aggiuntivi	10	14	10	12	12	12
Stati limite ultimi						
Tensione fy [N/mm2]	450.00	450.00	450.00	450.00	450.00	450.00
Tipo acciaio	tipo C	tipo C	tipo C	tipo C	tipo C	tipo C
Coefficiente gamma s	1.15	1.15	1.15	1.15	1.15	1.15
Coefficiente gamma c	1.50	1.50	1.50	1.50	1.50	1.50
Fattore di confidenza FC	0.0	0.0	0.0	0.0	0.0	0.0
Verifiche con N costante	Si	Si	Si	Si	Si	Si
Tensioni ammissibili						
Tensione amm. cls [N/mm2]	9.75	9.75	9.75	9.75	9.75	9.75
Tensione amm. acciaio [N/mm2]	260.00	260.00	260.00	260.00	260.00	260.00
Rapporto	15.00	15.00	15.00	15.00	15.00	15.00

Pareti c.a.	**1/7/..**	**2/8/..**	**3/9/..**	**4/10/..**	**5/11/..**	**6/12/..**
omogeneizzazione N						
Massimo rapporto area compressa/tesa	1.00	1.00	1.00	1.00	1.00	1.00
Parete sismica						
Fattore amplificazione taglio V	1.50	1.50	1.50	1.50	1.50	1.50
Hcrit. par. 7.4.4.5.1 [cm]	0.0	0.0	0.0	0.0	0.0	0.0
Hcrit. par. 7.4.6.1.4 [cm]	0.0	0.0	0.0	0.0	0.0	0.0
Usa diagramma di fig. 7.4.2	Si	No	No	Si	Si	No
Vincolo lati	nessun lato	nessun lato	nessun lato	nessun lato	nessun lato	nessun lato
Verifica come fascia	No	No	No	No	No	No
Diametro di estremità	0	0	0	0	0	0
Zona confinata						
Minima tesa	1.00	1.00	1.00	1.00	1.00	1.00
Massima tesa	4.00	4.00	4.00	4.00	4.00	4.00
Distanza barre [cm]	2.00	2.00	2.00	2.00	2.00	2.00
Interferro	2	2	2	2	2	2
Armatura inclinata						
Area barre [cm2]	0.0	0.0	0.0	0.0	0.0	0.0
Angolo orizzontale [gradi]	0.0	0.0	0.0	0.0	0.0	0.0
Distanza di base [cm]	0.0	0.0	0.0	0.0	0.0	0.0
Resistenza al fuoco						
3- intradosso	No	No	No	No	No	No
3+ estradosso	No	No	No	No	No	No
Tempo di esposizione R	15	15	15	15	15	15

Gusci c.a.	**1/7/..**	**2/8/..**	**3/9/..**	**4/10/..**	**5/11/..**	**6/12/..**
Armatura						
Inclinazione Ax [gradi]	0.0	0.0	0.0	0.0	0.0	0.0
Angolo Ax-Ay [gradi]	90.00	90.00	90.00	90.00	90.00	90.00
Minima tesa	0.31	0.31	0.31	0.31	0.31	0.31
Massima tesa	0.78	0.78	0.78	0.78	0.78	0.78
Maglia unica centrale	No	No	No	No	No	No
Copriferro [cm]	2.00	4.00	4.00	3.00	2.00	2.00
Maglia x						
diametro	12	14	10	12	12	12
passo	15	15	15	15	15	15
diametro aggiuntivi	12	14	10	12	12	12
Maglia y						
diametro	12	14	10	10	12	12

Gusci c.a.	**1/7/..**	**2/8/..**	**3/9/..**	**4/10/..**	**5/11/..**	**6/12/..**
passo	15	15	15	15	15	15
diametro aggiuntivi	12	14	10	10	12	12
Stati limite ultimi						
Tensione fy [N/mm2]	450.00	450.00	450.00	450.00	450.00	450.00
Tipo acciaio	tipo C	tipo C	tipo C	tipo C	tipo C	tipo C
Coefficiente gamma s	1.15	1.15	1.15	1.15	1.15	1.15
Coefficiente gamma c	1.50	1.50	1.50	1.50	1.50	1.50
Fattore di confidenza FC	0.0	0.0	0.0	0.0	0.0	0.0
Verifiche con N costante	Si	Si	Si	Si	Si	Si
Applica SLU da DIN	No	No	No	No	No	No
Tensioni ammissibili						
Tensione amm. cls [N/mm2]	9.75	9.75	9.75	9.75	9.75	9.75
Tensione amm. acciaio [N/mm2]	260.00	260.00	260.00	260.00	260.00	260.00
Rapporto omogeneizzazione N	15.00	15.00	15.00	15.00	15.00	15.00
Massimo rapporto area compressa/tesa	1.00	1.00	1.00	1.00	1.00	1.00
Resistenza al fuoco						
3- intradosso	No	No	No	No	No	No
3+ estradosso	No	No	No	No	No	No
Tempo di esposizione R	15	15	15	15	15	15

Travi c.a.	**1/7/..**	**2/8/..**	**3/9/..**	**4/10/..**	**5/11/..**	**6/12/..**
Generalità						
Progetta a filo	No	No	No	No	No	No
Af inf: da q*L*L /	0.0	0.0	0.0	0.0	0.0	0.0
Armatura						
Minima tesa	0.31	0.31	0.31	0.31	0.31	0.31
Minima compressa	0.31	0.31	0.31	0.31	0.31	0.31
Massima tesa	0.78	0.78	0.78	0.78	0.78	0.78
Da sezione	Si	Si	Si	Si	Si	Si
Usa armatura teorica	No	No	No	No	No	No
Stati limite ultimi						
Tensione fy [N/mm2]	450.00	450.00	450.00	450.00	450.00	450.00
Tensione fy staffe [N/mm2]	450.00	450.00	450.00	450.00	450.00	450.00
Tipo acciaio	tipo C	tipo C	tipo C	tipo C	tipo C	tipo C
Coefficiente gamma s	1.15	1.15	1.15	1.15	1.15	1.15
Coefficiente gamma c	1.50	1.50	1.50	1.50	1.50	1.50
Fattore di confidenza FC	0.0	0.0	0.0	0.0	0.0	0.0
Verifiche con N costante	Si	Si	Si	Si	Si	Si
Fattore di ridistribuzione	0.0	0.0	0.0	0.0	0.0	0.0
Modello per il confinamento						
Relazione tensio-deformativa	Mander	Mander	Mander	Mander	Mander	Mander
Incrudimento acciaio	5.000e-03	5.000e-03	5.000e-03	5.000e-03	5.000e-03	5.000e-03
Fattore lambda	1.00	1.00	1.00	1.00	1.00	1.00
epsilon max,s	4.000e-02	4.000e-02	4.000e-02	4.000e-02	4.000e-02	4.000e-02
epsilon cu2	4.500e-03	4.500e-03	4.500e-03	4.500e-03	4.500e-03	4.500e-03
epsilon c2	0.0	0.0	0.0	0.0	0.0	0.0
epsilon cy	0.0	0.0	0.0	0.0	0.0	0.0
Tensioni ammissibili						
Tensione amm. cls [N/mm2]	9.75	9.75	9.75	9.75	9.75	9.75
Tensione amm. acciaio [N/mm2]	260.00	260.00	260.00	260.00	260.00	260.00
Rapporto omogeneizzazione N	15.00	15.00	15.00	15.00	15.00	15.00
Massimo rapporto area	1.00	1.00	1.00	1.00	1.00	1.00

Travi c.a.	1/7/..	2/8/..	3/9/..	4/10/..	5/11/..	6/12/..
compressa/tesa						
Staffe						
Diametro staffe	0.0	0.0	0.0	0.0	0.0	0.0
Passo minimo [cm]	4.00	5.00	5.00	4.00	4.00	4.00
Passo massimo [cm]	30.00	30.00	30.00	30.00	30.00	30.00
Passo raffittito [cm]	15.00	15.00	15.00	15.00	15.00	15.00
Lunghezza zona raffittita [cm]	50.00	50.00	50.00	50.00	50.00	50.00
Ctg(Teta) Max	2.50	2.50	2.50	2.50	2.50	2.50
Percentuale sagomati	0.0	0.0	0.0	0.0	0.0	0.0
Luce di taglio per GR [cm]	1.00	1.00	1.00	1.00	1.00	1.00
Adotta scorrimento medio	No	No	No	No	No	No
Torsione non essenziale inclusa	Si	Si	Si	Si	Si	Si

Pilastri c.a.	1/7/..	2/8/..	3/9/..	4/10/..	5/11/..	6/12/..
Generalità						
Progetto armatura	Privilegia lati	Privilegia lati	Privilegia lati	Privilegia lati	Privilegia lati	Privilegia lati
Progetta a filo	No	No	No	No	No	No
Effetti del 2 ordine	Si	Si	Si	Si	Si	Si
Beta per 2-2	1.00	1.00	1.00	1.00	1.00	1.00
Beta per 3-3	1.00	1.00	1.00	1.00	1.00	1.00
Armatura						
Massima tesa	4.00	4.00	4.00	4.00	4.00	4.00
Minima tesa	1.00	1.00	1.00	1.00	1.00	1.00
Stati limite ultimi						
Tensione fy [N/mm2]	450.00	450.00	450.00	450.00	450.00	450.00
Tensione fy staffe [N/mm2]	450.00	450.00	450.00	450.00	450.00	450.00
Tipo acciaio	tipo C	tipo C	tipo C	tipo C	tipo C	tipo C
Coefficiente gamma s	1.15	1.15	1.15	1.15	1.15	1.15
Coefficiente gamma c	1.50	1.50	1.50	1.50	1.50	1.50
Fattore di confidenza FC	0.0	0.0	0.0	0.0	0.0	0.0
Verifiche con N costante	Si	Si	Si	Si	Si	Si
Modello per il confinamento						
Relazione tensio-deformativa	Mander	Mander	Mander	Mander	Mander	Mander
Incrudimento acciaio	5.000e-03	5.000e-03	5.000e-03	5.000e-03	5.000e-03	5.000e-03
Fattore lambda	1.00	1.00	1.00	1.00	1.00	1.00
epsilon max,s	4.000e-02	4.000e-02	4.000e-02	4.000e-02	4.000e-02	4.000e-02
epsilon cu2	4.500e-03	4.500e-03	4.500e-03	4.500e-03	4.500e-03	4.500e-03
epsilon c2	0.0	0.0	0.0	0.0	0.0	0.0
epsilon cy	0.0	0.0	0.0	0.0	0.0	0.0
Tensioni ammissibili						
Tensione amm. cls [N/mm2]	9.75	9.75	9.75	9.75	9.75	9.75
Tensione amm. acciaio [N/mm2]	260.00	260.00	260.00	260.00	260.00	260.00
Rapporto omogeneizzazione N	15.00	15.00	15.00	15.00	15.00	15.00
Staffe						
Diametro staffe	0.0	0.0	0.0	0.0	0.0	0.0
Passo minimo [cm]	5.00	5.00	5.00	5.00	5.00	5.00
Passo massimo [cm]	25.00	25.00	25.00	25.00	25.00	25.00
Passo raffittito [cm]	15.00	15.00	15.00	15.00	15.00	15.00
Lunghezza zona raffittita [cm]	45.00	45.00	45.00	45.00	45.00	45.00
Ctg(Teta) Max	2.50	2.50	2.50	2.50	2.50	2.50
Luce di taglio per GR [cm]	1.00	1.00	1.00	1.00	1.00	1.00
Massimizza gerarchia	Si	Si	Si	Si	Si	Si

6. MODELLAZIONE DELLE SEZIONI

Il programma consente l'uso di sezioni diverse. Sono previsti i seguenti tipi di sezione:

1 sezione di tipo generico
2 profilati semplici
3 profilati accoppiati e speciali

Le sezioni utilizzate nella modellazione sono individuate da una sigla identificativa ed un codice numerico (gli elementi strutturali richiamano quest'ultimo nella propria descrizione). Per ogni sezione vengono riportati in tabella i seguenti dati:

Area	*area della sezione*
A V2	*area della sezione/fattore di taglio (per il taglio in direzione 2)*
A V3	*area della sezione/fattore di taglio (per il taglio in direzione 3)*
Jt	*fattore torsionale di rigidezza*
J2-2	*momento d'inerzia della sezione riferito all'asse 2*
J3-3	*momento d'inerzia della sezione riferito all'asse 3*
W2-2	*modulo di resistenza della sezione riferito all'asse 2*
W3-3	*modulo di resistenza della sezione riferito all'asse 3*
Wp2-2	*modulo di resistenza plastico della sezione riferito all'asse 2*
Wp3-3	*modulo di resistenza plastico della sezione riferito all'asse 3*

I dati sopra riportati vengono utilizzati per la determinazione dei carichi inerziali e per la definizione delle rigidezze degli elementi strutturali; qualora il valore di Area V2 (e/o Area V3) sia nullo la deformabilità per taglio V2 (e/o V3) è trascurata. La valutazione delle caratteristiche inerziali delle sezioni è condotta nel riferimento 2-3 dell'elemento.

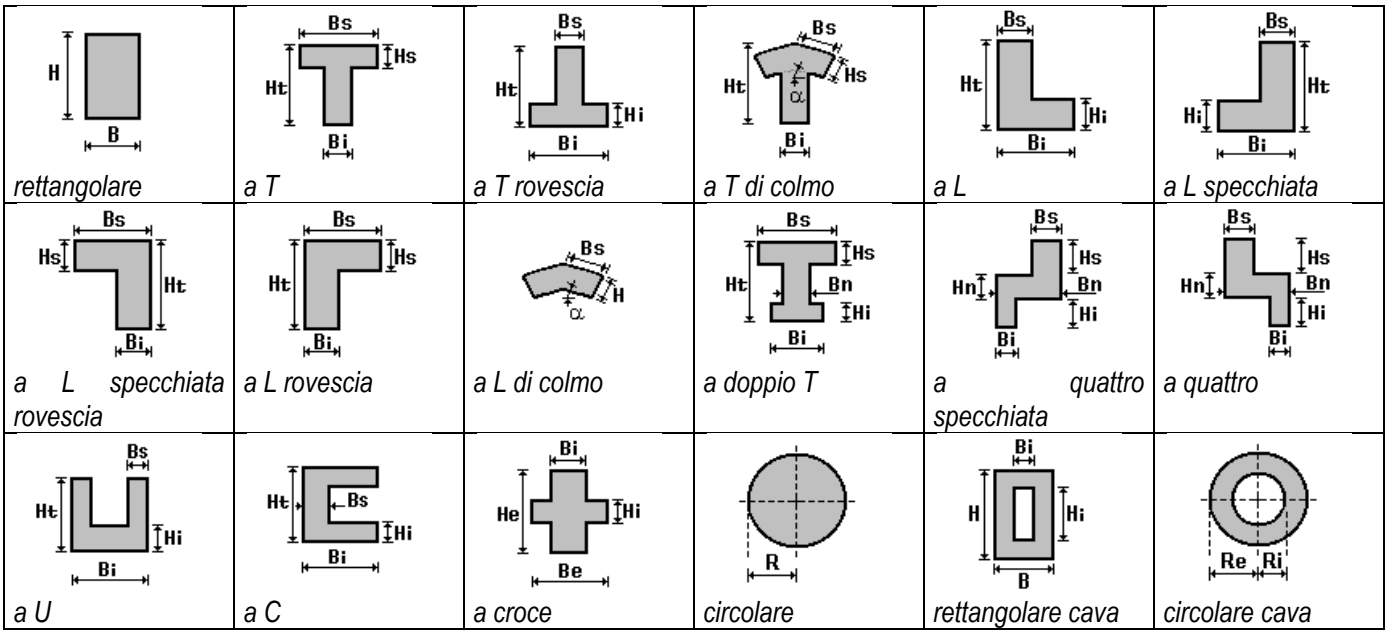

Per quanto concerne i profilati semplici ed accoppiati l'asse 2 del riferimento coincide con l'asse x riportato nei più diffusi profilatari.

Per quanto concerne le sezioni di tipo generico (tipo 1.):
i valori dimensionali con prefisso B sono riferiti all'asse 2
i valori dimensionali con prefisso H sono riferiti all'asse 3

Id	Tipo	Area	A V2	A V3	Jt	J 2-2	J 3-3	W 2-2	W 3-3	Wp 2-2	Wp 3-3
		cm2	cm2	cm2	cm4	cm4	cm4	cm3	cm3	cm3	cm3
8	HEA 180	45.30	0.0	0.0	14.80	925.00	2510.00	102.70	293.60	156.50	324.90

7. MODELLAZIONE STRUTTURA: NODI

Il programma utilizza per la modellazione nodi strutturali.
Ogni nodo è individuato dalle coordinate cartesiane nel sistema di riferimento globale (X Y Z).
Ad ogni nodo è eventualmente associato un codice di vincolamento rigido, un codice di fondazione speciale, ed un set di sei molle (tre per le traslazioni, tre per le rotazioni). Le tabelle sottoriportate riflettono le succitate possibilità. In particolare per ogni nodo viene indicato in tabella:

Nodo	*numero del nodo.*
X	*valore della coordinata X*
Y	*valore della coordinata Y*
Z	*valore della coordinata Z*

Per i nodi ai quali sia associato un codice di vincolamento rigido, un codice di fondazione speciale o un set di molle viene indicato in tabella:

Nodo	*numero del nodo.*
X	*valore della coordinata X*
Y	*valore della coordinata Y*
Z	*valore della coordinata Z*
Note	*eventuale codice di vincolo (es. v=110010 sei valori relativi ai sei gradi di libertà previsti per il nodo TxTyTzRxRyRz, il valore 1 indica che lo spostamento o rotazione relativo è impedito, il valore 0 indica che lo spostamento o rotazione relativo è libero).*
Note	*(FS = 1, 2,…) eventuale codice del tipo di fondazione speciale (1, 2,… fanno riferimento alle tipologie: plinto, palo, plinto su pali,…) che è collegato al nodo.* *(ISO = "id SIGLA") indice e sigla identificativa dell' eventuale isolatore sismico assegnato al nodo*
Rig. TX	*valore della rigidezza dei vincoli elastici eventualmente applicati al nodo, nello specifico TX (idem per TY, TZ, RX, RY, RZ).*

Per strutture sismicamente isolate viene inoltre inserita la tabella delle caratteristiche per gli isolatori utilizzati; le caratteristiche sono indicate in conformità al cap. 7.10 del D.M. 14/01/08

Nodo	**X**	**Y**	**Z**	**Nodo**	**X**	**Y**	**Z**	**Nodo**	**X**	**Y**	**Z**
	cm	cm	cm		cm	cm	cm		cm	cm	cm
1	360.0	110.5	0.0	2	360.0	110.5	46.5	3	360.0	158.3	46.5
4	360.0	158.3	0.0	5	360.0	110.5	93.0	6	360.0	158.3	93.0
7	360.0	206.1	46.5	8	360.0	206.1	0.0	9	360.0	206.1	93.0
10	360.0	253.9	46.5	11	360.0	253.9	0.0	12	360.0	253.9	93.0
13	360.0	301.7	46.5	14	360.0	301.7	0.0	15	360.0	301.7	93.0
16	360.0	349.5	46.5	17	360.0	349.5	0.0	18	360.0	349.5	93.0
19	360.0	397.3	46.5	20	360.0	397.3	0.0	21	360.0	397.3	93.0
22	360.0	445.1	46.5	23	360.0	445.1	0.0	24	360.0	445.1	93.0
25	360.0	492.9	46.5	26	360.0	492.9	0.0	27	360.0	492.9	93.0
28	360.0	540.7	46.5	29	360.0	540.7	0.0	30	360.0	540.7	93.0
31	360.0	588.5	46.5	32	360.0	588.5	0.0	33	360.0	588.5	93.0
34	360.0	636.3	46.5	35	360.0	636.3	0.0	36	360.0	636.3	93.0
37	360.0	684.1	46.5	38	360.0	684.1	0.0	39	360.0	684.1	93.0
40	360.0	731.9	46.5	41	360.0	731.9	0.0	42	360.0	731.9	93.0
43	360.0	779.7	46.5	44	360.0	779.7	0.0	45	360.0	779.7	93.0
46	360.0	827.5	46.5	47	360.0	827.5	0.0	48	360.0	827.5	93.0
49	360.0	875.3	46.5	50	360.0	875.3	0.0	51	360.0	875.3	93.0
52	360.0	923.1	46.5	53	360.0	923.1	0.0	54	360.0	923.1	93.0
55	360.0	970.9	46.5	56	360.0	970.9	0.0	57	360.0	970.9	93.0
58	360.0	1018.7	46.5	59	360.0	1018.7	0.0	60	360.0	1018.7	93.0
61	360.0	1066.5	46.5	62	360.0	1066.5	0.0	63	360.0	1066.5	93.0

64	360.0	1114.3	46.5	65	360.0	1114.3	0.0	66	360.0	1114.3	93.0
67	360.0	1162.1	46.5	68	360.0	1162.1	0.0	69	360.0	1162.1	93.0
70	360.0	1209.9	46.5	71	360.0	1209.9	0.0	72	360.0	1209.9	93.0
73	360.0	1257.7	46.5	74	360.0	1257.7	0.0	75	360.0	1257.7	93.0
76	360.0	1305.5	46.5	77	360.0	1305.5	0.0	78	360.0	1305.5	93.0
79	360.0	110.5	133.0	80	360.0	158.3	133.0	81	360.0	110.5	173.0
82	360.0	158.3	173.0	83	360.0	206.1	133.0	84	360.0	206.1	173.0
85	360.0	253.9	133.0	86	360.0	253.9	173.0	87	360.0	301.7	133.0
88	360.0	301.7	173.0	89	360.0	349.5	133.0	90	360.0	349.5	173.0
91	360.0	397.3	133.0	92	360.0	397.3	173.0	93	360.0	445.1	133.0
94	360.0	445.1	173.0	95	360.0	492.9	133.0	96	360.0	492.9	173.0
97	360.0	540.7	133.0	98	360.0	540.7	173.0	99	360.0	588.5	133.0
100	360.0	588.5	173.0	101	360.0	636.3	133.0	102	360.0	636.3	173.0
103	360.0	684.1	133.0	104	360.0	684.1	173.0	105	360.0	731.9	133.0
106	360.0	731.9	173.0	107	360.0	779.7	133.0	108	360.0	779.7	173.0
109	360.0	827.5	133.0	110	360.0	827.5	173.0	111	360.0	875.3	133.0
112	360.0	875.3	173.0	113	360.0	923.1	133.0	114	360.0	923.1	173.0
115	360.0	970.9	133.0	116	360.0	970.9	173.0	117	360.0	1018.7	133.0
118	360.0	1018.7	173.0	119	360.0	1066.5	133.0	120	360.0	1066.5	173.0
121	360.0	1114.3	133.0	122	360.0	1114.3	173.0	123	360.0	1162.1	133.0
124	360.0	1162.1	173.0	125	360.0	1209.9	133.0	126	360.0	1209.9	173.0
127	360.0	1257.7	133.0	128	360.0	1257.7	173.0	129	360.0	1305.5	133.0
130	360.0	1305.5	173.0	131	360.0	1305.5	213.0	132	360.0	1257.7	213.0
133	360.0	1305.5	253.0	134	360.0	1257.7	253.0	135	360.0	1209.9	213.0
136	360.0	1209.9	253.0	137	360.0	1162.1	213.0	138	360.0	1162.1	253.0
139	360.0	1114.3	213.0	140	360.0	1114.3	253.0	141	360.0	1066.5	213.0
142	360.0	1066.5	253.0	143	360.0	1018.7	213.0	144	360.0	1018.7	253.0
145	360.0	970.9	213.0	146	360.0	970.9	253.0	147	360.0	923.1	213.0
148	360.0	923.1	253.0	149	360.0	875.3	213.0	150	360.0	875.3	253.0
151	360.0	827.5	213.0	152	360.0	827.5	253.0	153	360.0	779.7	213.0
154	360.0	779.7	253.0	155	360.0	731.9	213.0	156	360.0	731.9	253.0
157	360.0	684.1	213.0	158	360.0	684.1	253.0	159	360.0	636.3	213.0
160	360.0	636.3	253.0	161	360.0	588.5	213.0	162	360.0	588.5	253.0
163	360.0	540.7	213.0	164	360.0	540.7	253.0	165	360.0	492.9	213.0
166	360.0	492.9	253.0	167	360.0	445.1	213.0	168	360.0	445.1	253.0
169	360.0	397.3	213.0	170	360.0	397.3	253.0	171	360.0	349.5	213.0
172	360.0	349.5	253.0	173	360.0	301.7	213.0	174	360.0	301.7	253.0
175	360.0	253.9	213.0	176	360.0	253.9	253.0	177	360.0	206.1	213.0
178	360.0	206.1	253.0	179	360.0	158.3	213.0	180	360.0	158.3	253.0
181	360.0	110.5	213.0	182	360.0	110.5	253.0	183	360.0	110.5	298.0
184	360.0	158.3	298.0	185	360.0	110.5	343.0	186	360.0	158.3	343.0
187	360.0	206.1	298.0	188	360.0	206.1	343.0	189	360.0	253.9	298.0
190	360.0	253.9	343.0	191	360.0	301.7	298.0	192	360.0	301.7	343.0
193	360.0	349.5	298.0	194	360.0	349.5	343.0	195	360.0	397.3	298.0
196	360.0	397.3	343.0	197	360.0	445.1	298.0	198	360.0	445.1	343.0
199	360.0	492.9	298.0	200	360.0	492.9	343.0	201	360.0	540.7	298.0
202	360.0	540.7	343.0	203	360.0	588.5	298.0	204	360.0	588.5	343.0
205	360.0	636.3	298.0	206	360.0	636.3	343.0	207	360.0	684.1	298.0
208	360.0	684.1	343.0	209	360.0	731.9	298.0	210	360.0	731.9	343.0
211	360.0	779.7	298.0	212	360.0	779.7	343.0	213	360.0	827.5	298.0
214	360.0	827.5	343.0	215	360.0	875.3	298.0	216	360.0	875.3	343.0
217	360.0	923.1	298.0	218	360.0	923.1	343.0	219	360.0	970.9	298.0
220	360.0	970.9	343.0	221	360.0	1018.7	298.0	222	360.0	1018.7	343.0
223	360.0	1066.5	298.0	224	360.0	1066.5	343.0	225	360.0	1114.3	298.0
226	360.0	1114.3	343.0	227	360.0	1162.1	298.0	228	360.0	1162.1	343.0
229	360.0	1209.9	298.0	230	360.0	1209.9	343.0	231	360.0	1257.7	298.0
232	360.0	1257.7	343.0	233	360.0	1305.5	298.0	234	0.0	110.5	343.0
235	110.0	110.5	0.0	236	110.0	110.5	46.5	237	135.0	110.5	46.5

238	135.0	110.5	0.0	239	110.0	110.5	93.0	240	135.0	110.5	93.0
241	160.0	110.5	46.5	242	160.0	110.5	0.0	243	160.0	110.5	93.0
244	185.0	110.5	46.5	245	185.0	110.5	0.0	246	185.0	110.5	93.0
247	210.0	110.5	46.5	248	210.0	110.5	0.0	249	210.0	110.5	93.0
250	235.0	110.5	46.5	251	235.0	110.5	0.0	252	235.0	110.5	93.0
253	260.0	110.5	46.5	254	260.0	110.5	0.0	255	260.0	110.5	93.0
256	285.0	110.5	46.5	257	285.0	110.5	0.0	258	285.0	110.5	93.0
259	310.0	110.5	46.5	260	310.0	110.5	0.0	261	310.0	110.5	93.0
262	335.0	110.5	46.5	263	335.0	110.5	0.0	264	335.0	110.5	93.0
265	385.0	110.5	46.5	266	385.0	110.5	0.0	267	385.0	110.5	93.0
268	410.0	110.5	46.5	269	410.0	110.5	0.0	270	410.0	110.5	93.0
271	435.0	110.5	46.5	272	435.0	110.5	0.0	273	435.0	110.5	93.0
274	460.0	110.5	46.5	275	460.0	110.5	0.0	276	460.0	110.5	93.0
277	485.0	110.5	46.5	278	485.0	110.5	0.0	279	485.0	110.5	93.0
280	510.0	110.5	46.5	281	510.0	110.5	0.0	282	510.0	110.5	93.0
283	535.0	110.5	46.5	284	535.0	110.5	0.0	285	535.0	110.5	93.0
286	560.0	110.5	46.5	287	560.0	110.5	0.0	288	560.0	110.5	93.0
289	585.0	110.5	46.5	290	585.0	110.5	0.0	291	585.0	110.5	93.0
292	610.0	110.5	46.5	293	610.0	110.5	0.0	294	610.0	110.5	93.0
295	110.0	110.5	133.0	296	135.0	110.5	133.0	297	110.0	110.5	173.0
298	135.0	110.5	173.0	299	160.0	110.5	133.0	300	160.0	110.5	173.0
301	185.0	110.5	133.0	302	185.0	110.5	173.0	303	210.0	110.5	133.0
304	210.0	110.5	173.0	305	235.0	110.5	133.0	306	235.0	110.5	173.0
307	260.0	110.5	133.0	308	260.0	110.5	173.0	309	285.0	110.5	133.0
310	285.0	110.5	173.0	311	310.0	110.5	133.0	312	310.0	110.5	173.0
313	335.0	110.5	133.0	314	335.0	110.5	173.0	315	385.0	110.5	133.0
316	385.0	110.5	173.0	317	410.0	110.5	133.0	318	410.0	110.5	173.0
319	435.0	110.5	133.0	320	435.0	110.5	173.0	321	460.0	110.5	133.0
322	460.0	110.5	173.0	323	485.0	110.5	133.0	324	485.0	110.5	173.0
325	510.0	110.5	133.0	326	510.0	110.5	173.0	327	535.0	110.5	133.0
328	535.0	110.5	173.0	329	560.0	110.5	133.0	330	560.0	110.5	173.0
331	585.0	110.5	133.0	332	585.0	110.5	173.0	333	610.0	110.5	133.0
334	610.0	110.5	173.0	335	385.0	110.5	213.0	336	385.0	110.5	253.0
337	410.0	110.5	213.0	338	410.0	110.5	253.0	339	435.0	110.5	213.0
340	435.0	110.5	253.0	341	460.0	110.5	213.0	342	460.0	110.5	253.0
343	485.0	110.5	213.0	344	485.0	110.5	253.0	345	510.0	110.5	213.0
346	510.0	110.5	253.0	347	535.0	110.5	213.0	348	535.0	110.5	253.0
349	560.0	110.5	213.0	350	560.0	110.5	253.0	351	585.0	110.5	213.0
352	585.0	110.5	253.0	353	610.0	110.5	213.0	354	610.0	110.5	253.0
355	335.0	110.5	213.0	356	335.0	110.5	253.0	357	310.0	110.5	213.0
358	310.0	110.5	253.0	359	285.0	110.5	213.0	360	285.0	110.5	253.0
361	260.0	110.5	213.0	362	260.0	110.5	253.0	363	235.0	110.5	213.0
364	235.0	110.5	253.0	365	210.0	110.5	213.0	366	210.0	110.5	253.0
367	185.0	110.5	213.0	368	185.0	110.5	253.0	369	160.0	110.5	213.0
370	160.0	110.5	253.0	371	135.0	110.5	213.0	372	135.0	110.5	253.0
373	110.0	110.5	213.0	374	110.0	110.5	253.0	375	110.0	110.5	298.0
376	135.0	110.5	298.0	377	110.0	110.5	343.0	378	135.0	110.5	343.0
379	160.0	110.5	298.0	380	160.0	110.5	343.0	381	185.0	110.5	298.0
382	185.0	110.5	343.0	383	210.0	110.5	298.0	384	210.0	110.5	343.0
385	235.0	110.5	298.0	386	235.0	110.5	343.0	387	260.0	110.5	298.0
388	260.0	110.5	343.0	389	285.0	110.5	298.0	390	285.0	110.5	343.0
391	310.0	110.5	298.0	392	310.0	110.5	343.0	393	335.0	110.5	298.0
394	335.0	110.5	343.0	395	385.0	110.5	298.0	396	385.0	110.5	343.0
397	410.0	110.5	298.0	398	410.0	110.5	343.0	399	435.0	110.5	298.0
400	435.0	110.5	343.0	401	460.0	110.5	298.0	402	460.0	110.5	343.0
403	485.0	110.5	298.0	404	485.0	110.5	343.0	405	510.0	110.5	298.0
406	510.0	110.5	343.0	407	535.0	110.5	298.0	408	535.0	110.5	343.0
409	560.0	110.5	298.0	410	560.0	110.5	343.0	411	585.0	110.5	298.0

412	585.0	110.5	343.0	413	610.0	110.5	298.0	414	610.0	110.5	343.0
415	210.0	1305.5	0.0	416	720.0	110.5	343.0	417	0.0	1305.5	343.0
418	185.0	1305.5	0.0	419	720.0	1305.5	343.0	420	720.0	1305.5	0.0
421	160.0	1305.5	0.0	422	235.0	1305.5	0.0	423	720.0	110.5	0.0
424	135.0	1305.5	0.0	425	0.0	1305.5	0.0	426	0.0	110.5	0.0
427	110.0	1305.5	0.0	428	385.0	1305.5	46.5	429	385.0	1305.5	0.0
430	385.0	1305.5	93.0	431	410.0	1305.5	46.5	432	410.0	1305.5	0.0
433	410.0	1305.5	93.0	434	435.0	1305.5	46.5	435	435.0	1305.5	0.0
436	435.0	1305.5	93.0	437	460.0	1305.5	46.5	438	460.0	1305.5	0.0
439	460.0	1305.5	93.0	440	485.0	1305.5	46.5	441	485.0	1305.5	0.0
442	485.0	1305.5	93.0	443	510.0	1305.5	46.5	444	510.0	1305.5	0.0
445	510.0	1305.5	93.0	446	535.0	1305.5	46.5	447	535.0	1305.5	0.0
448	535.0	1305.5	93.0	449	560.0	1305.5	46.5	450	560.0	1305.5	0.0
451	560.0	1305.5	93.0	452	585.0	1305.5	46.5	453	585.0	1305.5	0.0
454	585.0	1305.5	93.0	455	610.0	1305.5	46.5	456	610.0	1305.5	0.0
457	610.0	1305.5	93.0	458	335.0	1305.5	46.5	459	335.0	1305.5	0.0
460	335.0	1305.5	93.0	461	310.0	1305.5	46.5	462	310.0	1305.5	0.0
463	310.0	1305.5	93.0	464	285.0	1305.5	46.5	465	285.0	1305.5	0.0
466	285.0	1305.5	93.0	467	260.0	1305.5	46.5	468	260.0	1305.5	0.0
469	260.0	1305.5	93.0	470	235.0	1305.5	46.5	471	235.0	1305.5	93.0
472	210.0	1305.5	46.5	473	210.0	1305.5	93.0	474	185.0	1305.5	46.5
475	185.0	1305.5	93.0	476	160.0	1305.5	46.5	477	160.0	1305.5	93.0
478	135.0	1305.5	46.5	479	135.0	1305.5	93.0	480	110.0	1305.5	46.5
481	110.0	1305.5	93.0	482	610.0	1305.5	133.0	483	585.0	1305.5	133.0
484	610.0	1305.5	173.0	485	585.0	1305.5	173.0	486	560.0	1305.5	133.0
487	560.0	1305.5	173.0	488	535.0	1305.5	133.0	489	535.0	1305.5	173.0
490	510.0	1305.5	133.0	491	510.0	1305.5	173.0	492	485.0	1305.5	133.0
493	485.0	1305.5	173.0	494	460.0	1305.5	133.0	495	460.0	1305.5	173.0
496	435.0	1305.5	133.0	497	435.0	1305.5	173.0	498	410.0	1305.5	133.0
499	410.0	1305.5	173.0	500	385.0	1305.5	133.0	501	385.0	1305.5	173.0
502	335.0	1305.5	133.0	503	335.0	1305.5	173.0	504	310.0	1305.5	133.0
505	310.0	1305.5	173.0	506	285.0	1305.5	133.0	507	285.0	1305.5	173.0
508	260.0	1305.5	133.0	509	260.0	1305.5	173.0	510	235.0	1305.5	133.0
511	235.0	1305.5	173.0	512	210.0	1305.5	133.0	513	210.0	1305.5	173.0
514	185.0	1305.5	133.0	515	185.0	1305.5	173.0	516	160.0	1305.5	133.0
517	160.0	1305.5	173.0	518	135.0	1305.5	133.0	519	135.0	1305.5	173.0
520	110.0	1305.5	133.0	521	110.0	1305.5	173.0	522	610.0	1305.5	213.0
523	585.0	1305.5	213.0	524	610.0	1305.5	253.0	525	585.0	1305.5	253.0
526	560.0	1305.5	213.0	527	560.0	1305.5	253.0	528	535.0	1305.5	213.0
529	535.0	1305.5	253.0	530	510.0	1305.5	213.0	531	510.0	1305.5	253.0
532	485.0	1305.5	213.0	533	485.0	1305.5	253.0	534	460.0	1305.5	213.0
535	460.0	1305.5	253.0	536	435.0	1305.5	213.0	537	435.0	1305.5	253.0
538	410.0	1305.5	213.0	539	410.0	1305.5	253.0	540	385.0	1305.5	213.0
541	385.0	1305.5	253.0	542	335.0	1305.5	213.0	543	335.0	1305.5	253.0
544	310.0	1305.5	213.0	545	310.0	1305.5	253.0	546	285.0	1305.5	213.0
547	285.0	1305.5	253.0	548	260.0	1305.5	213.0	549	260.0	1305.5	253.0
550	235.0	1305.5	213.0	551	235.0	1305.5	253.0	552	210.0	1305.5	213.0
553	210.0	1305.5	253.0	554	185.0	1305.5	213.0	555	185.0	1305.5	253.0
556	160.0	1305.5	213.0	557	160.0	1305.5	253.0	558	135.0	1305.5	213.0
559	135.0	1305.5	253.0	560	110.0	1305.5	213.0	561	110.0	1305.5	253.0
562	610.0	1305.5	298.0	563	585.0	1305.5	298.0	564	610.0	1305.5	343.0
565	585.0	1305.5	343.0	566	560.0	1305.5	298.0	567	560.0	1305.5	343.0
568	535.0	1305.5	298.0	569	535.0	1305.5	343.0	570	510.0	1305.5	298.0
571	510.0	1305.5	343.0	572	485.0	1305.5	298.0	573	485.0	1305.5	343.0
574	460.0	1305.5	298.0	575	460.0	1305.5	343.0	576	435.0	1305.5	298.0
577	435.0	1305.5	343.0	578	410.0	1305.5	298.0	579	410.0	1305.5	343.0
580	385.0	1305.5	298.0	581	385.0	1305.5	343.0	582	360.0	1305.5	343.0
583	335.0	1305.5	298.0	584	335.0	1305.5	343.0	585	310.0	1305.5	298.0

586	310.0	1305.5	343.0	587	285.0	1305.5	298.0	588	285.0	1305.5	343.0
					-OMISSIS-						
2176	60.1	988.8	0.0	2177	56.8	1060.8	0.0	2178	57.5	1117.4	0.0
2179	49.3	1216.0	0.0	2180	58.4	444.8	0.0	2181	49.4	1259.8	0.0
2182	720.0	190.2	0.0	2183	720.0	269.9	0.0	2184	720.0	349.5	0.0
2185	720.0	429.2	0.0	2186	720.0	508.9	0.0	2187	720.0	588.5	0.0
2188	720.0	668.2	0.0	2189	720.0	747.9	0.0	2190	720.0	827.5	0.0
2191	720.0	907.2	0.0	2192	720.0	986.9	0.0	2193	720.0	1066.5	0.0
2194	720.0	1146.2	0.0	2195	720.0	1225.9	0.0	2196	660.5	254.2	0.0
2197	661.1	692.4	0.0	2198	670.2	158.2	0.0	2199	664.3	1164.7	0.0
2200	647.0	348.0	0.0	2201	661.8	305.6	0.0	2202	675.2	387.9	0.0
2203	661.0	514.8	0.0	2204	670.4	200.1	0.0	2205	664.9	584.0	0.0
2206	661.3	642.4	0.0	2207	658.4	756.0	0.0	2208	659.5	827.7	0.0
2209	659.1	903.0	0.0	2210	659.6	988.8	0.0	2211	662.5	1062.8	0.0
2212	662.2	1118.2	0.0	2213	670.7	1216.1	0.0	2214	670.5	442.2	0.0
2215	670.6	1259.9	0.0	2216	0.0	2.7	0.0	2217	360.0	2.7	0.0
2218	288.0	2.7	0.0	2219	216.0	2.7	0.0	2220	144.0	2.7	0.0
2221	72.0	2.7	0.0	2222	160.3	75.4	0.0	2223	214.7	52.8	0.0
2224	104.3	53.1	0.0	2225	325.6	49.8	0.0	2226	273.9	76.6	0.0
2227	304.7	79.8	0.0	2228	234.9	81.0	0.0	2229	189.8	82.7	0.0
2230	276.1	42.6	0.0	2231	158.7	43.0	0.0	2232	210.2	94.8	0.0
2233	132.6	77.7	0.0	2234	720.0	2.7	0.0	2235	648.0	2.7	0.0
2236	576.0	2.7	0.0	2237	504.0	2.7	0.0	2238	432.0	2.7	0.0
2239	451.5	77.5	0.0	2240	419.0	83.4	0.0	2241	505.2	51.9	0.0
2242	392.6	57.7	0.0	2243	559.3	75.5	0.0	2244	530.4	82.8	0.0
2245	615.4	53.1	0.0	2246	487.1	82.2	0.0	2247	720.0	2668.5	343.0
2248	0.0	2668.5	343.0	2249	640.0	2668.5	343.0	2250	560.0	2668.5	343.0
2251	480.0	2668.5	343.0	2252	400.0	2668.5	343.0	2253	320.0	2668.5	343.0
2254	240.0	2668.5	343.0	2255	160.0	2668.5	343.0	2256	80.0	2668.5	343.0
2257	225.9	2593.2	343.0	2258	151.4	2596.9	343.0	2259	361.9	2629.5	343.0
2260	200.6	2629.0	343.0	2261	474.1	2606.8	343.0	2262	534.9	2615.3	343.0
2263	415.3	2597.4	343.0	2264	579.0	2618.5	343.0	2265	367.2	2590.5	343.0
2266	317.6	2591.1	343.0	2267	267.9	2591.3	343.0	2268	250.0	2628.8	343.0
2269	313.9	2630.4	343.0	2270	199.7	2578.0	343.0	2271	0.0	2.7	393.0
2272	0.0	110.5	393.0	2273	0.0	158.3	393.0	2274	0.0	206.1	393.0
2275	0.0	253.9	393.0	2276	0.0	301.7	393.0	2277	0.0	349.5	393.0
2278	0.0	397.3	393.0	2279	0.0	445.1	393.0	2280	0.0	492.9	393.0
2281	0.0	540.7	393.0	2282	0.0	588.5	393.0	2283	0.0	636.3	393.0
2284	0.0	684.1	393.0	2285	0.0	731.9	393.0	2286	0.0	779.7	393.0
2287	0.0	827.5	393.0	2288	0.0	875.3	393.0	2289	0.0	923.1	393.0
2290	0.0	970.9	393.0	2291	0.0	1018.7	393.0	2292	0.0	1066.5	393.0
2293	0.0	1114.3	393.0	2294	0.0	1162.1	393.0	2295	0.0	1209.9	393.0
2296	0.0	1257.7	393.0	2297	0.0	1305.5	393.0	2298	0.0	1413.3	393.0
2299	0.0	1455.8	393.0	2300	0.0	1500.0	393.0	2301	0.0	1544.2	393.0
2302	0.0	1588.4	393.0	2303	0.0	1632.6	393.0	2304	0.0	1676.8	393.0
2305	0.0	1721.0	393.0	2306	0.0	1765.2	393.0	2307	0.0	1809.4	393.0
2308	0.0	1853.6	393.0	2309	0.0	1897.8	393.0	2310	0.0	1942.0	393.0
2311	0.0	1986.2	393.0	2312	0.0	2030.4	393.0	2313	0.0	2074.6	393.0
2314	0.0	2118.8	393.0	2315	0.0	2163.0	393.0	2316	0.0	2207.2	393.0
2317	0.0	2251.4	393.0	2318	0.0	2295.6	393.0	2319	0.0	2339.8	393.0
2320	0.0	2384.0	393.0	2321	0.0	2428.2	393.0	2322	0.0	2472.4	393.0
2323	0.0	2516.6	393.0	2324	0.0	2560.8	393.0	2325	0.0	2668.5	393.0
2326	80.0	2668.5	393.0	2327	160.0	2668.5	393.0	2328	240.0	2668.5	393.0
2329	320.0	2668.5	393.0	2330	400.0	2668.5	393.0	2331	480.0	2668.5	393.0
2332	560.0	2668.5	393.0	2333	640.0	2668.5	393.0	2334	720.0	2668.5	393.0
2335	720.0	110.5	393.0	2336	720.0	2.7	393.0	2337	720.0	158.3	393.0
2338	720.0	206.1	393.0	2339	720.0	253.9	393.0	2340	720.0	301.7	393.0
2341	720.0	349.5	393.0	2342	720.0	397.3	393.0	2343	720.0	445.1	393.0

2344	720.0	492.9	393.0	2345	720.0	540.7	393.0	2346	720.0	588.5	393.0
2347	720.0	636.3	393.0	2348	720.0	684.1	393.0	2349	720.0	731.9	393.0
2350	720.0	779.7	393.0	2351	720.0	827.5	393.0	2352	720.0	875.3	393.0
2353	720.0	923.1	393.0	2354	720.0	970.9	393.0	2355	720.0	1018.7	393.0
2356	720.0	1066.5	393.0	2357	720.0	1114.3	393.0	2358	720.0	1162.1	393.0
2359	720.0	1209.9	393.0	2360	720.0	1257.7	393.0	2361	720.0	1305.5	393.0
2362	720.0	1413.3	393.0	2363	720.0	1455.8	393.0	2364	720.0	1500.0	393.0
2365	720.0	1544.2	393.0	2366	720.0	1588.4	393.0	2367	720.0	1632.6	393.0
2368	720.0	1676.8	393.0	2369	720.0	1721.0	393.0	2370	720.0	1765.2	393.0
2371	720.0	1809.4	393.0	2372	720.0	1853.6	393.0	2373	720.0	1897.8	393.0
2374	720.0	1942.0	393.0	2375	720.0	1986.2	393.0	2376	720.0	2030.4	393.0
2377	720.0	2074.6	393.0	2378	720.0	2118.8	393.0	2379	720.0	2163.0	393.0
2380	720.0	2207.2	393.0	2381	720.0	2251.4	393.0	2382	720.0	2295.6	393.0
2383	720.0	2339.8	393.0	2384	720.0	2384.0	393.0	2385	720.0	2428.2	393.0
2386	720.0	2472.4	393.0	2387	720.0	2516.6	393.0	2388	720.0	2560.8	393.0
2389	80.0	2.7	393.0	2390	160.0	2.7	393.0	2391	240.0	2.7	393.0
2392	320.0	2.7	393.0	2393	480.0	2.7	393.0	2394	640.0	2.7	393.0
2395	400.0	2.7	393.0	2396	560.0	2.7	393.0				

8. MODELLAZIONE STRUTTURA: ELEMENTI TRAVE

Il programma utilizza per la modellazione elementi a due nodi denominati in generale travi.
Ogni elemento trave è individuato dal nodo iniziale e dal nodo finale.
Ogni elemento è caratterizzato da un insieme di proprietà riportate in tabella che ne completano la modellazione.

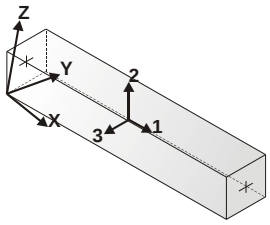

orientamento elementi 2D non verticali

orientamento elementi 2D verticali

In particolare per ogni elemento viene indicato in tabella:

Elem.	*numero dell'elemento*
Note	*codice di comportamento: trave, trave di fondazione, pilastro, asta, asta tesa, asta compressa,*
Nodo I (J)	*numero del nodo iniziale (finale)*
Mat.	*codice del materiale assegnato all'elemento*
Sez.	*codice della sezione assegnata all'elemento*
Rotaz.	*valore della rotazione dell'elemento, attorno al proprio asse, nel caso in cui l'orientamento di default non sia adottabile; l'orientamento di default prevede per gli elementi non verticali l'asse 2 contenuto nel piano verticale e l'asse 3 orizzontale, per gli elementi verticali l'asse 2 diretto secondo X negativo e l'asse 3 diretto secondo Y negativo*
Svincolo I (J)	*codici di svincolo per le azioni interne; i primi sei codici si riferiscono al nodo iniziale, i restanti sei al nodo finale (il valore 1 indica che la relativa azione interna non è attiva)*
Wink V	*costante di sottofondo (coefficiente di Winkler) per la modellazione della trave su suolo elastico*
Wink O	*costante di sottofondo (coefficiente di Winkler) per la modellazione del suolo elastico orizzontale*

Elem.Note	**Nodo I**	**Nodo J**	**Mat.**	**Sez.**	**Rotaz.**	**Svincolo I**	**Svincolo J**	**Wink V**	**Wink O**	
						gradi			daN/cm3	daN/cm3
1	Pilas.	425	417	11	8	90.00				
2	Pilas.	420	419	11	8	90.00				
3	Pilas.	423	416	11	8	90.00				
4	Pilas.	426	234	11	8	90.00				
5	Pilas.	1905	1490	11	8	90.00				
6	Pilas.	1906	1489	11	8	90.00				
7	Pilas.	1907	1517	11	8	90.00				
8	Pilas.	1909	1516	11	8	90.00				

9. MODELLAZIONE STRUTTURA: ELEMENTI SHELL

Il programma utilizza per la modellazione elementi a tre o quattro nodi denominati in generale shell.
Ogni elemento shell è individuato dai nodi I, J, K, L (L=I per gli elementi a tre nodi).
Ogni elemento è caratterizzato da un insieme di proprietà riportate in tabella che ne completano la modellazione.

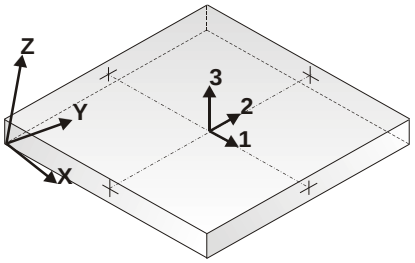

orientamento elementi 3D non verticali

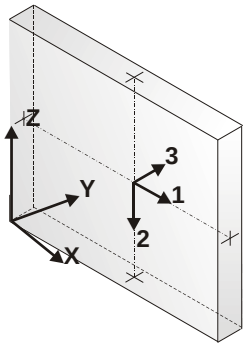

orientamento elementi 3D verticali

In particolare per ogni elemento viene indicato in tabella:

Elem.	*numero dell'elemento*
Note	*codice di comportamento:* *Guscio (elemento guscio in elevazione non verticale)* *Guscio fond. (elemento guscio su suolo elastico)* *Setto (elemento guscio in elevazione verticale)* *Membrana (elemento guscio con comportamento membranale)*
Nodo I (J, K, L)	*numero del nodo I (J, K, L)*
Mat.	*codice del materiale assegnato all'elemento*
Spessore	*spessore dell'elemento (costante)*
Wink V	*costante di sottofondo (coefficiente di Winkler) per la modellazione del suolo elastico verticale*
Wink O	*costante di sottofondo (coefficiente di Winkler) per la modellazione del suolo elastico orizzontale*

Elem.	**Note**	**Nodo I**	**Nodo J**	**Nodo K**	**Nodo L**	**Mat.**	**Spessore** cm	**Wink V** daN/cm3	**Wink O** daN/cm3
1	Setto	1	4	3	2	3	20.0		
2	Setto	2	3	6	5	3	20.0		
3	Setto	4	8	7	3	3	20.0		
4	Setto	3	7	9	6	3	20.0		
5	Setto	8	11	10	7	3	20.0		
6	Setto	7	10	12	9	3	20.0		
7	Setto	11	14	13	10	3	20.0		
8	Setto	10	13	15	12	3	20.0		
9	Setto	14	17	16	13	3	20.0		
10	Setto	13	16	18	15	3	20.0		
11	Setto	17	20	19	16	3	20.0		
12	Setto	16	19	21	18	3	20.0		
13	Setto	20	23	22	19	3	20.0		
14	Setto	19	22	24	21	3	20.0		
15	Setto	23	26	25	22	3	20.0		
16	Setto	22	25	27	24	3	20.0		
17	Setto	26	29	28	25	3	20.0		
18	Setto	25	28	30	27	3	20.0		
19	Setto	29	32	31	28	3	20.0		
20	Setto	28	31	33	30	3	20.0		
21	Setto	32	35	34	31	3	20.0		
22	Setto	31	34	36	33	3	20.0		

23	Setto	35	38	37	34	3	20.0
24	Setto	34	37	39	36	3	20.0
25	Setto	38	41	40	37	3	20.0
26	Setto	37	40	42	39	3	20.0
27	Setto	41	44	43	40	3	20.0
28	Setto	40	43	45	42	3	20.0
29	Setto	44	47	46	43	3	20.0
30	Setto	43	46	48	45	3	20.0
31	Setto	47	50	49	46	3	20.0
32	Setto	46	49	51	48	3	20.0
33	Setto	50	53	52	49	3	20.0
34	Setto	49	52	54	51	3	20.0
35	Setto	53	56	55	52	3	20.0
36	Setto	52	55	57	54	3	20.0
37	Setto	56	59	58	55	3	20.0
38	Setto	55	58	60	57	3	20.0
39	Setto	59	62	61	58	3	20.0
40	Setto	58	61	63	60	3	20.0
41	Setto	62	65	64	61	3	20.0
42	Setto	61	64	66	63	3	20.0
43	Setto	65	68	67	64	3	20.0
44	Setto	64	67	69	66	3	20.0
45	Setto	68	71	70	67	3	20.0
46	Setto	67	70	72	69	3	20.0
47	Setto	71	74	73	70	3	20.0
48	Setto	70	73	75	72	3	20.0
49	Setto	74	77	76	73	3	20.0
50	Setto	73	76	78	75	3	20.0
51	Setto	5	6	80	79	3	20.0
52	Setto	79	80	82	81	3	20.0
53	Setto	6	9	83	80	3	20.0
54	Setto	80	83	84	82	3	20.0
55	Setto	9	12	85	83	3	20.0
56	Setto	83	85	86	84	3	20.0
57	Setto	12	15	87	85	3	20.0
58	Setto	85	87	88	86	3	20.0
59	Setto	15	18	89	87	3	20.0
60	Setto	87	89	90	88	3	20.0
61	Setto	18	21	91	89	3	20.0
62	Setto	89	91	92	90	3	20.0
63	Setto	21	24	93	91	3	20.0
64	Setto	91	93	94	92	3	20.0
65	Setto	24	27	95	93	3	20.0
66	Setto	93	95	96	94	3	20.0
67	Setto	27	30	97	95	3	20.0
68	Setto	95	97	98	96	3	20.0
69	Setto	30	33	99	97	3	20.0
70	Setto	97	99	100	98	3	20.0
71	Setto	33	36	101	99	3	20.0
72	Setto	99	101	102	100	3	20.0
73	Setto	36	39	103	101	3	20.0
74	Setto	101	103	104	102	3	20.0
75	Setto	39	42	105	103	3	20.0
76	Setto	103	105	106	104	3	20.0
77	Setto	42	45	107	105	3	20.0
78	Setto	105	107	108	106	3	20.0
79	Setto	45	48	109	107	3	20.0
80	Setto	107	109	110	108	3	20.0

81	Setto	48	51	111	109	3	20.0
82	Setto	109	111	112	110	3	20.0
83	Setto	51	54	113	111	3	20.0
84	Setto	111	113	114	112	3	20.0
85	Setto	54	57	115	113	3	20.0
86	Setto	113	115	116	114	3	20.0
87	Setto	57	60	117	115	3	20.0
88	Setto	115	117	118	116	3	20.0
89	Setto	60	63	119	117	3	20.0
90	Setto	117	119	120	118	3	20.0
91	Setto	63	66	121	119	3	20.0
92	Setto	119	121	122	120	3	20.0
93	Setto	66	69	123	121	3	20.0
94	Setto	121	123	124	122	3	20.0
95	Setto	69	72	125	123	3	20.0
96	Setto	123	125	126	124	3	20.0
97	Setto	72	75	127	125	3	20.0
98	Setto	125	127	128	126	3	20.0
99	Setto	75	78	129	127	3	20.0
100	Setto	127	129	130	128	3	20.0
101	Setto	128	130	131	132	3	20.0
102	Setto	132	131	133	134	3	20.0
103	Setto	126	128	132	135	3	20.0
104	Setto	135	132	134	136	3	20.0
105	Setto	124	126	135	137	3	20.0
106	Setto	137	135	136	138	3	20.0
107	Setto	122	124	137	139	3	20.0
108	Setto	139	137	138	140	3	20.0
109	Setto	120	122	139	141	3	20.0
110	Setto	141	139	140	142	3	20.0
111	Setto	118	120	141	143	3	20.0
112	Setto	143	141	142	144	3	20.0
113	Setto	116	118	143	145	3	20.0
114	Setto	145	143	144	146	3	20.0
115	Setto	114	116	145	147	3	20.0
116	Setto	147	145	146	148	3	20.0
117	Setto	112	114	147	149	3	20.0
118	Setto	149	147	148	150	3	20.0
119	Setto	110	112	149	151	3	20.0
120	Setto	151	149	150	152	3	20.0
121	Setto	108	110	151	153	3	20.0
122	Setto	153	151	152	154	3	20.0
123	Setto	106	108	153	155	3	20.0
124	Setto	155	153	154	156	3	20.0
125	Setto	104	106	155	157	3	20.0
126	Setto	157	155	156	158	3	20.0
127	Setto	102	104	157	159	3	20.0
128	Setto	159	157	158	160	3	20.0
129	Setto	100	102	159	161	3	20.0
130	Setto	161	159	160	162	3	20.0
131	Setto	98	100	161	163	3	20.0
132	Setto	163	161	162	164	3	20.0
133	Setto	96	98	163	165	3	20.0
134	Setto	165	163	164	166	3	20.0
135	Setto	94	96	165	167	3	20.0
136	Setto	167	165	166	168	3	20.0
137	Setto	92	94	167	169	3	20.0
138	Setto	169	167	168	170	3	20.0

139	Setto	90	92	169	171	3	20.0		
140	Setto	171	169	170	172	3	20.0		
141	Setto	88	90	171	173	3	20.0		
142	Setto	173	171	172	174	3	20.0		
143	Setto	86	88	173	175	3	20.0		
144	Setto	175	173	174	176	3	20.0		
145	Setto	84	86	175	177	3	20.0		
146	Setto	177	175	176	178	3	20.0		
147	Setto	82	84	177	179	3	20.0		
148	Setto	179	177	178	180	3	20.0		
149	Setto	81	82	179	181	3	20.0		
150	Setto	181	179	180	182	3	20.0		
151	Setto	182	180	184	183	3	20.0		
152	Setto	183	184	186	185	3	20.0		
153	Setto	180	178	187	184	3	20.0		
154	Setto	184	187	188	186	3	20.0		
155	Setto	178	176	189	187	3	20.0		
156	Setto	187	189	190	188	3	20.0		
157	Setto	176	174	191	189	3	20.0		
158	Setto	189	191	192	190	3	20.0		
159	Setto	174	172	193	191	3	20.0		
160	Setto	191	193	194	192	3	20.0		
161	Setto	172	170	195	193	3	20.0		
				-OMISSIS-					
1875	Guscio fond.	418	415	1889	1890	3	30.0	2.50	2.00
1876	Guscio fond.	1890	1889	944	947	3	30.0	2.50	2.00
1877	Guscio fond.	421	418	1890	1891	3	30.0	2.50	2.00
1878	Guscio fond.	1891	1890	947	950	3	30.0	2.50	2.00
1879	Guscio fond.	424	421	1891	1892	3	30.0	2.50	2.00
1880	Guscio fond.	1892	1891	950	953	3	30.0	2.50	2.00
1881	Guscio fond.	427	424	1892	1893	3	30.0	2.50	2.00
1882	Guscio fond.	1893	1892	953	956	3	30.0	2.50	2.00
1883	Guscio fond.	453	456	1894	1895	3	30.0	2.50	2.00
1884	Guscio fond.	1895	1894	895	898	3	30.0	2.50	2.00
1885	Guscio fond.	450	453	1895	1896	3	30.0	2.50	2.00
1886	Guscio fond.	1896	1895	898	902	3	30.0	2.50	2.00
1887	Guscio fond.	447	450	1896	1897	3	30.0	2.50	2.00
1888	Guscio fond.	1897	1896	902	905	3	30.0	2.50	2.00
1889	Guscio fond.	444	447	1897	1898	3	30.0	2.50	2.00
1890	Guscio fond.	1898	1897	905	908	3	30.0	2.50	2.00
1891	Guscio fond.	441	444	1898	1899	3	30.0	2.50	2.00
1892	Guscio fond.	1899	1898	908	911	3	30.0	2.50	2.00
1893	Guscio fond.	438	441	1899	1900	3	30.0	2.50	2.00
1894	Guscio fond.	1900	1899	911	914	3	30.0	2.50	2.00
1895	Guscio fond.	435	438	1900	1901	3	30.0	2.50	2.00
1896	Guscio fond.	1901	1900	914	917	3	30.0	2.50	2.00
1897	Guscio fond.	432	435	1901	1902	3	30.0	2.50	2.00
1898	Guscio fond.	1902	1901	917	920	3	30.0	2.50	2.00
1899	Guscio fond.	429	432	1902	1903	3	30.0	2.50	2.00
1900	Guscio fond.	1903	1902	920	923	3	30.0	2.50	2.00
1901	Guscio fond.	77	429	1903	1883	3	30.0	2.50	2.00
1902	Guscio fond.	1883	1903	923	926	3	30.0	2.50	2.00
1903	Guscio fond.	941	938	1958	1959	3	30.0	2.50	2.00
1904	Guscio fond.	932	929	1343	1958	3	30.0	2.50	2.00
1905	Guscio fond.	953	950	1959	1858	3	30.0	2.50	2.00
1906	Guscio fond.	947	944	1959		3	30.0	2.50	2.00
1907	Guscio fond.	1958	935	932		3	30.0	2.50	2.00
1908	Guscio fond.	938	935	1958		3	30.0	2.50	2.00

1909 Guscio fond.	1959	944	941		3	30.0	2.50	2.00
1910 Guscio fond.	950	947	1959		3	30.0	2.50	2.00
1911 Guscio fond.	956	953	1858		3	30.0	2.50	2.00
1912 Guscio fond.	929	926	1343		3	30.0	2.50	2.00
1913 Guscio fond.	1958	1343	1340	1960	3	30.0	2.50	2.00
1914 Guscio fond.	1959	1958	1960	1961	3	30.0	2.50	2.00
1915 Guscio fond.	1858	1959	1961	1857	3	30.0	2.50	2.00
1916 Guscio fond.	1960	1340	1337	1962	3	30.0	2.50	2.00
1917 Guscio fond.	1961	1960	1962	1963	3	30.0	2.50	2.00
1918 Guscio fond.	1857	1961	1963	1856	3	30.0	2.50	2.00
1919 Guscio fond.	1962	1337	1334	1964	3	30.0	2.50	2.00
1920 Guscio fond.	1963	1962	1964	1965	3	30.0	2.50	2.00
1921 Guscio fond.	1856	1963	1965	1855	3	30.0	2.50	2.00
1922 Guscio fond.	1964	1334	1331	1966	3	30.0	2.50	2.00
1923 Guscio fond.	1965	1964	1966	1967	3	30.0	2.50	2.00
1924 Guscio fond.	1855	1965	1967	1854	3	30.0	2.50	2.00
1925 Guscio fond.	1966	1331	1328	1968	3	30.0	2.50	2.00
1926 Guscio fond.	1967	1966	1968	1969	3	30.0	2.50	2.00
1927 Guscio fond.	1854	1967	1969	1853	3	30.0	2.50	2.00
1928 Guscio fond.	1968	1328	1325	1970	3	30.0	2.50	2.00
1929 Guscio fond.	1969	1968	1970	1971	3	30.0	2.50	2.00
1930 Guscio fond.	1853	1969	1971	1852	3	30.0	2.50	2.00
1931 Guscio fond.	1970	1325	1322	1972	3	30.0	2.50	2.00
1932 Guscio fond.	1971	1970	1972	1973	3	30.0	2.50	2.00
1933 Guscio fond.	1852	1971	1973	1851	3	30.0	2.50	2.00
1934 Guscio fond.	1972	1322	1319	1974	3	30.0	2.50	2.00
1935 Guscio fond.	1973	1972	1974	1975	3	30.0	2.50	2.00
1936 Guscio fond.	1851	1973	1975	1850	3	30.0	2.50	2.00
1937 Guscio fond.	1974	1319	1316	1976	3	30.0	2.50	2.00
1938 Guscio fond.	1975	1974	1976	1977	3	30.0	2.50	2.00
1939 Guscio fond.	1850	1975	1977	1849	3	30.0	2.50	2.00
1940 Guscio fond.	1976	1316	1313	1978	3	30.0	2.50	2.00
1941 Guscio fond.	1977	1976	1978	1979	3	30.0	2.50	2.00
1942 Guscio fond.	1849	1977	1979	1848	3	30.0	2.50	2.00
1943 Guscio fond.	1978	1313	1310	1980	3	30.0	2.50	2.00
1944 Guscio fond.	1979	1978	1980	1981	3	30.0	2.50	2.00
1945 Guscio fond.	1848	1979	1981	1847	3	30.0	2.50	2.00
1946 Guscio fond.	1980	1310	1307	1982	3	30.0	2.50	2.00
1947 Guscio fond.	1981	1980	1982	1983	3	30.0	2.50	2.00
1948 Guscio fond.	1847	1981	1983	1846	3	30.0	2.50	2.00
1949 Guscio fond.	1982	1307	1304	1984	3	30.0	2.50	2.00
1950 Guscio fond.	1983	1982	1984	1985	3	30.0	2.50	2.00
1951 Guscio fond.	1846	1983	1985	1845	3	30.0	2.50	2.00
1952 Guscio fond.	1984	1304	1301	1986	3	30.0	2.50	2.00
1953 Guscio fond.	1985	1984	1986	1987	3	30.0	2.50	2.00
1954 Guscio fond.	1845	1985	1987	1844	3	30.0	2.50	2.00
1955 Guscio fond.	1986	1301	1298	1988	3	30.0	2.50	2.00
1956 Guscio fond.	1987	1986	1988	1989	3	30.0	2.50	2.00
1957 Guscio fond.	1844	1987	1989	1843	3	30.0	2.50	2.00
1958 Guscio fond.	1988	1298	1295	1990	3	30.0	2.50	2.00
1959 Guscio fond.	1989	1988	1990	1991	3	30.0	2.50	2.00
1960 Guscio fond.	1843	1989	1991	1842	3	30.0	2.50	2.00
1961 Guscio fond.	1990	1295	1292	1992	3	30.0	2.50	2.00
1962 Guscio fond.	1991	1990	1992	1993	3	30.0	2.50	2.00
1963 Guscio fond.	1842	1991	1993	1841	3	30.0	2.50	2.00
1964 Guscio fond.	1992	1292	1289	1994	3	30.0	2.50	2.00
1965 Guscio fond.	1993	1992	1994	1995	3	30.0	2.50	2.00
1966 Guscio fond.	1841	1993	1995	1840	3	30.0	2.50	2.00

1967 Guscio fond.	1994	1289	1286	1996	3	30.0	2.50	2.00
1968 Guscio fond.	1995	1994	1996	1997	3	30.0	2.50	2.00
1969 Guscio fond.	1840	1995	1997	1839	3	30.0	2.50	2.00
1970 Guscio fond.	1996	1286	1283	1998	3	30.0	2.50	2.00
1971 Guscio fond.	1997	1996	1998	1999	3	30.0	2.50	2.00
1972 Guscio fond.	1839	1997	1999	1838	3	30.0	2.50	2.00
1973 Guscio fond.	1998	1283	1280	2000	3	30.0	2.50	2.00
1974 Guscio fond.	1999	1998	2000	2001	3	30.0	2.50	2.00
1975 Guscio fond.	1838	1999	2001	1837	3	30.0	2.50	2.00
1976 Guscio fond.	2000	1280	1277	2002	3	30.0	2.50	2.00
1977 Guscio fond.	2001	2000	2002	2003	3	30.0	2.50	2.00
1978 Guscio fond.	1837	2001	2003	1836	3	30.0	2.50	2.00
1979 Guscio fond.	1835	2005	1091	1087	3	30.0	2.50	2.00
1980 Guscio fond.	2004	1274	1112	1109	3	30.0	2.50	2.00
1981 Guscio fond.	2005	2004	1100	1097	3	30.0	2.50	2.00
1982 Guscio fond.	1094	2005	1097		3	30.0	2.50	2.00
1983 Guscio fond.	2004	1109	1106		3	30.0	2.50	2.00
1984 Guscio fond.	1112	1274	1115		3	30.0	2.50	2.00
1985 Guscio fond.	1084	1835	1087		3	30.0	2.50	2.00
1986 Guscio fond.	1103	2004	1106		3	30.0	2.50	2.00
1987 Guscio fond.	1100	2004	1103		3	30.0	2.50	2.00
1988 Guscio fond.	1091	2005	1094		3	30.0	2.50	2.00
1989 Guscio fond.	1836	2003	2005	1835	3	30.0	2.50	2.00
1990 Guscio fond.	2003	2002	2004	2005	3	30.0	2.50	2.00
1991 Guscio fond.	2002	1277	1274	2004	3	30.0	2.50	2.00
1992 Guscio fond.	911	908	2068	2069	3	30.0	2.50	2.00
1993 Guscio fond.	902	898	1882	2068	3	30.0	2.50	2.00
1994 Guscio fond.	923	920	2069	1343	3	30.0	2.50	2.00
1995 Guscio fond.	917	914	2069		3	30.0	2.50	2.00
1996 Guscio fond.	2068	905	902		3	30.0	2.50	2.00
1997 Guscio fond.	908	905	2068		3	30.0	2.50	2.00
1998 Guscio fond.	2069	914	911		3	30.0	2.50	2.00
1999 Guscio fond.	920	917	2069		3	30.0	2.50	2.00
2000 Guscio fond.	926	923	1343		3	30.0	2.50	2.00
2001 Guscio fond.	898	895	1882		3	30.0	2.50	2.00
2002 Guscio fond.	2068	1882	1881	2070	3	30.0	2.50	2.00
2003 Guscio fond.	2069	2068	2070	2071	3	30.0	2.50	2.00
2004 Guscio fond.	1343	2069	2071	1340	3	30.0	2.50	2.00
2005 Guscio fond.	2070	1881	1880	2072	3	30.0	2.50	2.00
2006 Guscio fond.	2071	2070	2072	2073	3	30.0	2.50	2.00
2007 Guscio fond.	1340	2071	2073	1337	3	30.0	2.50	2.00
2008 Guscio fond.	2072	1880	1879	2074	3	30.0	2.50	2.00
2009 Guscio fond.	2073	2072	2074	2075	3	30.0	2.50	2.00
2010 Guscio fond.	1337	2073	2075	1334	3	30.0	2.50	2.00
2011 Guscio fond.	2074	1879	1878	2076	3	30.0	2.50	2.00
2012 Guscio fond.	2075	2074	2076	2077	3	30.0	2.50	2.00
2013 Guscio fond.	1334	2075	2077	1331	3	30.0	2.50	2.00
2014 Guscio fond.	2076	1878	1877	2078	3	30.0	2.50	2.00
2015 Guscio fond.	2077	2076	2078	2079	3	30.0	2.50	2.00
2016 Guscio fond.	1331	2077	2079	1328	3	30.0	2.50	2.00
2017 Guscio fond.	2078	1877	1876	2080	3	30.0	2.50	2.00
2018 Guscio fond.	2079	2078	2080	2081	3	30.0	2.50	2.00
2019 Guscio fond.	1328	2079	2081	1325	3	30.0	2.50	2.00
2020 Guscio fond.	2080	1876	1875	2082	3	30.0	2.50	2.00
2021 Guscio fond.	2081	2080	2082	2083	3	30.0	2.50	2.00
2022 Guscio fond.	1325	2081	2083	1322	3	30.0	2.50	2.00
2023 Guscio fond.	2082	1875	1874	2084	3	30.0	2.50	2.00
2024 Guscio fond.	2083	2082	2084	2085	3	30.0	2.50	2.00

2025 Guscio fond.	1322	2083	2085	1319	3	30.0	2.50	2.00
2026 Guscio fond.	2084	1874	1873	2086	3	30.0	2.50	2.00
2027 Guscio fond.	2085	2084	2086	2087	3	30.0	2.50	2.00
2028 Guscio fond.	1319	2085	2087	1316	3	30.0	2.50	2.00
2029 Guscio fond.	2086	1873	1872	2088	3	30.0	2.50	2.00
2030 Guscio fond.	2087	2086	2088	2089	3	30.0	2.50	2.00
2031 Guscio fond.	1316	2087	2089	1313	3	30.0	2.50	2.00
2032 Guscio fond.	2088	1872	1871	2090	3	30.0	2.50	2.00
2033 Guscio fond.	2089	2088	2090	2091	3	30.0	2.50	2.00
2034 Guscio fond.	1313	2089	2091	1310	3	30.0	2.50	2.00
2035 Guscio fond.	2090	1871	1870	2092	3	30.0	2.50	2.00
2036 Guscio fond.	2091	2090	2092	2093	3	30.0	2.50	2.00
2037 Guscio fond.	1310	2091	2093	1307	3	30.0	2.50	2.00
2038 Guscio fond.	2092	1870	1869	2094	3	30.0	2.50	2.00
2039 Guscio fond.	2093	2092	2094	2095	3	30.0	2.50	2.00
2040 Guscio fond.	1307	2093	2095	1304	3	30.0	2.50	2.00
2041 Guscio fond.	2094	1869	1868	2096	3	30.0	2.50	2.00
2042 Guscio fond.	2095	2094	2096	2097	3	30.0	2.50	2.00
2043 Guscio fond.	1304	2095	2097	1301	3	30.0	2.50	2.00
2044 Guscio fond.	2096	1868	1867	2098	3	30.0	2.50	2.00
2045 Guscio fond.	2097	2096	2098	2099	3	30.0	2.50	2.00
2046 Guscio fond.	1301	2097	2099	1298	3	30.0	2.50	2.00
2047 Guscio fond.	2098	1867	1866	2100	3	30.0	2.50	2.00
2048 Guscio fond.	2099	2098	2100	2101	3	30.0	2.50	2.00
2049 Guscio fond.	1298	2099	2101	1295	3	30.0	2.50	2.00
2050 Guscio fond.	2100	1866	1865	2102	3	30.0	2.50	2.00
2051 Guscio fond.	2101	2100	2102	2103	3	30.0	2.50	2.00
2052 Guscio fond.	1295	2101	2103	1292	3	30.0	2.50	2.00
2053 Guscio fond.	2102	1865	1864	2104	3	30.0	2.50	2.00
2054 Guscio fond.	2103	2102	2104	2105	3	30.0	2.50	2.00
2055 Guscio fond.	1292	2103	2105	1289	3	30.0	2.50	2.00
2056 Guscio fond.	2104	1864	1863	2106	3	30.0	2.50	2.00
2057 Guscio fond.	2105	2104	2106	2107	3	30.0	2.50	2.00
2058 Guscio fond.	1289	2105	2107	1286	3	30.0	2.50	2.00
2059 Guscio fond.	2106	1863	1862	2108	3	30.0	2.50	2.00
2060 Guscio fond.	2107	2106	2108	2109	3	30.0	2.50	2.00
2061 Guscio fond.	1286	2107	2109	1283	3	30.0	2.50	2.00
2062 Guscio fond.	2108	1862	1861	2110	3	30.0	2.50	2.00
2063 Guscio fond.	2109	2108	2110	2111	3	30.0	2.50	2.00
2064 Guscio fond.	1283	2109	2111	1280	3	30.0	2.50	2.00
2065 Guscio fond.	2110	1861	1860	2112	3	30.0	2.50	2.00
2066 Guscio fond.	2111	2110	2112	2113	3	30.0	2.50	2.00
2067 Guscio fond.	1280	2111	2113	1277	3	30.0	2.50	2.00
2068 Guscio fond.	1274	2114	1121	1118	3	30.0	2.50	2.00
2069 Guscio fond.	2115	1859	1142	1139	3	30.0	2.50	2.00
2070 Guscio fond.	2114	2115	1130	1127	3	30.0	2.50	2.00
2071 Guscio fond.	1124	2114	1127		3	30.0	2.50	2.00
2072 Guscio fond.	2115	1139	1136		3	30.0	2.50	2.00
2073 Guscio fond.	1142	1859	1145		3	30.0	2.50	2.00
2074 Guscio fond.	1115	1274	1118		3	30.0	2.50	2.00
2075 Guscio fond.	1133	2115	1136		3	30.0	2.50	2.00
2076 Guscio fond.	1130	2115	1133		3	30.0	2.50	2.00
2077 Guscio fond.	1121	2114	1124		3	30.0	2.50	2.00
2078 Guscio fond.	1277	2113	2114	1274	3	30.0	2.50	2.00
2079 Guscio fond.	2113	2112	2115	2114	3	30.0	2.50	2.00
2080 Guscio fond.	2112	1860	1859	2115	3	30.0	2.50	2.00
2081 Guscio fond.	1133	1136	2016	2021	3	15.0	2.50	2.00
2082 Guscio fond.	1145	1906	2007	2008	3	15.0	2.50	2.00

2083 Guscio fond.	1127	1130	2018	2019	3	15.0	2.50	2.00
2084 Guscio fond.	2021	2016	2014	2018	3	15.0	2.50	2.00
2085 Guscio fond.	1118	1121	2013	2015	3	15.0	2.50	2.00
2086 Guscio fond.	2014	2017	2009	2010	3	15.0	2.50	2.00
2087 Guscio fond.	1124	1127	2019	2013	3	15.0	2.50	2.00
2088 Guscio fond.	1130	1133	2021	2018	3	15.0	2.50	2.00
2089 Guscio fond.	2017	1145	2008	2009	3	15.0	2.50	2.00
2090 Guscio fond.	2019	2018	2014	2020	3	15.0	2.50	2.00
2091 Guscio fond.	1139	1142	2017	2012	3	15.0	2.50	2.00
2092 Guscio fond.	2016	2012	2017	2014	3	15.0	2.50	2.00
2093 Guscio fond.	2020	2014	2010	2011	3	15.0	2.50	2.00
2094 Guscio fond.	2015	2020	2011	2006	3	15.0	2.50	2.00
2095 Guscio fond.	2013	2019	2020	2015	3	15.0	2.50	2.00
2096 Guscio fond.	1115	1118	2015	2006	3	15.0	2.50	2.00
2097 Guscio fond.	1136	1139	2012	2016	3	15.0	2.50	2.00
2098 Guscio fond.	1121	1124	2013		3	15.0	2.50	2.00
2099 Guscio fond.	2017	1142	1145		3	15.0	2.50	2.00
2100 Guscio fond.	1100	1103	2034	2033	3	15.0	2.50	2.00
2101 Guscio fond.	2034	2027	2029	2035	3	15.0	2.50	2.00
2102 Guscio fond.	1097	1100	2033	2037	3	15.0	2.50	2.00
2103 Guscio fond.	2031	2032	2028	2036	3	15.0	2.50	2.00
2104 Guscio fond.	1109	1112	2029	2027	3	15.0	2.50	2.00
2105 Guscio fond.	2037	2033	2028	2032	3	15.0	2.50	2.00
2106 Guscio fond.	1087	1091	2031	2030	3	15.0	2.50	2.00
2107 Guscio fond.	2036	2028	2025	2024	3	15.0	2.50	2.00
2108 Guscio fond.	1091	1094	2032	2031	3	15.0	2.50	2.00
2109 Guscio fond.	1112	1115	2006	2029	3	15.0	2.50	2.00
2110 Guscio fond.	1094	1097	2037	2032	3	15.0	2.50	2.00
2111 Guscio fond.	1103	1106	2027	2034	3	15.0	2.50	2.00
2112 Guscio fond.	2030	2036	2024	2023	3	15.0	2.50	2.00
2113 Guscio fond.	1084	1087	2030	2023	3	15.0	2.50	2.00
2114 Guscio fond.	2035	2029	2006	2026	3	15.0	2.50	2.00
2115 Guscio fond.	1907	1084	2023	2022	3	15.0	2.50	2.00
2116 Guscio fond.	2028	2035	2026	2025	3	15.0	2.50	2.00
2117 Guscio fond.	2033	2034	2035	2028	3	15.0	2.50	2.00
2118 Guscio fond.	2030	2031	2036		3	15.0	2.50	2.00
2119 Guscio fond.	1106	1109	2027		3	15.0	2.50	2.00
2120 Guscio fond.	2061	1904	2045	2062	3	15.0	2.50	2.00
2121 Guscio fond.	1868	2062	2063	1867	3	15.0	2.50	2.00
2122 Guscio fond.	2057	2042	2043	2059	3	15.0	2.50	2.00
2123 Guscio fond.	1859	2052	1906	1145	3	15.0	2.50	2.00
2124 Guscio fond.	1875	2057	2059	1874	3	15.0	2.50	2.00
2125 Guscio fond.	2054	2047	2048	2065	3	15.0	2.50	2.00
2126 Guscio fond.	2055	2041	2042	2057	3	15.0	2.50	2.00
2127 Guscio fond.	2065	2048	2049	2066	3	15.0	2.50	2.00
2128 Guscio fond.	2053	2044	1904	2061	3	15.0	2.50	2.00
2129 Guscio fond.	2059	2043	2044	2060	3	15.0	2.50	2.00
2130 Guscio fond.	1865	2054	2065	1864	3	15.0	2.50	2.00
2131 Guscio fond.	1879	2056	2055	1878	3	15.0	2.50	2.00
2132 Guscio fond.	1863	2065	2066	1862	3	15.0	2.50	2.00
2133 Guscio fond.	2066	2049	2050	2051	3	15.0	2.50	2.00
2134 Guscio fond.	2062	2045	2046	2063	3	15.0	2.50	2.00
2135 Guscio fond.	1867	2063	2064	1866	3	15.0	2.50	2.00
2136 Guscio fond.	1877	2055	2057	1876	3	15.0	2.50	2.00
2137 Guscio fond.	1872	2053	2061	1871	3	15.0	2.50	2.00
2138 Guscio fond.	2056	2040	2041	2055	3	15.0	2.50	2.00
2139 Guscio fond.	1870	2061	2062	1869	3	15.0	2.50	2.00
2140 Guscio fond.	2051	2050	2038	2052	3	15.0	2.50	2.00

2141 Guscio fond.	1874	2059	2060	1873	3	15.0	2.50	2.00
2142 Guscio fond.	2058	2039	2040	2056	3	15.0	2.50	2.00
2143 Guscio fond.	895	1905	2067	1882	3	15.0	2.50	2.00
2144 Guscio fond.	1860	2051	2052	1859	3	15.0	2.50	2.00
2145 Guscio fond.	1881	2058	2056	1880	3	15.0	2.50	2.00
2146 Guscio fond.	2063	2046	2047	2064	3	15.0	2.50	2.00
2147 Guscio fond.	1873	2060	2053	1872	3	15.0	2.50	2.00
2148 Guscio fond.	1861	2066	2051	1860	3	15.0	2.50	2.00
2149 Guscio fond.	2067	1905	2039	2058	3	15.0	2.50	2.00
2150 Guscio fond.	1866	2064	2054	1865	3	15.0	2.50	2.00
2151 Guscio fond.	1882	2067	2058	1881	3	15.0	2.50	2.00
2152 Guscio fond.	2054	2064	2047		3	15.0	2.50	2.00
2153 Guscio fond.	1878	2055	1877		3	15.0	2.50	2.00
2154 Guscio fond.	1876	2057	1875		3	15.0	2.50	2.00
2155 Guscio fond.	1870	1871	2061		3	15.0	2.50	2.00
2156 Guscio fond.	2053	2060	2044		3	15.0	2.50	2.00
2157 Guscio fond.	1879	1880	2056		3	15.0	2.50	2.00
2158 Guscio fond.	1869	2062	1868		3	15.0	2.50	2.00
2159 Guscio fond.	1863	1864	2065		3	15.0	2.50	2.00
2160 Guscio fond.	2052	2038	1906		3	15.0	2.50	2.00
2161 Guscio fond.	1862	2066	1861		3	15.0	2.50	2.00
2162 Guscio fond.	2134	1852	1851	2136	3	15.0	2.50	2.00
2163 Guscio fond.	2125	2142	2128	2126	3	15.0	2.50	2.00
2164 Guscio fond.	2123	2141	2131	2124	3	15.0	2.50	2.00
2165 Guscio fond.	1908	2138	2139	2122	3	15.0	2.50	2.00
2166 Guscio fond.	2124	2131	2142	2125	3	15.0	2.50	2.00
2167 Guscio fond.	2139	1845	1844	2140	3	15.0	2.50	2.00
2168 Guscio fond.	2136	1850	1849	2137	3	15.0	2.50	2.00
2169 Guscio fond.	2129	1836	1835	2143	3	15.0	2.50	2.00
2170 Guscio fond.	2143	1835	1084	1907	3	15.0	2.50	2.00
2171 Guscio fond.	2122	2139	2140	2123	3	15.0	2.50	2.00
2172 Guscio fond.	2120	2136	2137	2121	3	15.0	2.50	2.00
2173 Guscio fond.	2126	2128	2129	2127	3	15.0	2.50	2.00
2174 Guscio fond.	2121	2130	2138	1908	3	15.0	2.50	2.00
2175 Guscio fond.	2131	1841	1840	2142	3	15.0	2.50	2.00
2176 Guscio fond.	2127	2129	2143	1907	3	15.0	2.50	2.00
2177 Guscio fond.	2123	2140	2145	2141	3	15.0	2.50	2.00
2178 Guscio fond.	2130	1848	1847	2138	3	15.0	2.50	2.00
2179 Guscio fond.	1909	956	1858	2144	3	15.0	2.50	2.00
2180 Guscio fond.	2118	2132	2134	2119	3	15.0	2.50	2.00
2181 Guscio fond.	2137	1849	1848	2130	3	15.0	2.50	2.00
2182 Guscio fond.	2117	2133	2132	2118	3	15.0	2.50	2.00
2183 Guscio fond.	2132	1853	1852	2134	3	15.0	2.50	2.00
2184 Guscio fond.	2142	1839	1838	2128	3	15.0	2.50	2.00
2185 Guscio fond.	2128	1837	1836	2129	3	15.0	2.50	2.00
2186 Guscio fond.	2140	1844	1843	2145	3	15.0	2.50	2.00
2187 Guscio fond.	2141	1842	1841	2131	3	15.0	2.50	2.00
2188 Guscio fond.	2144	1858	1857	2135	3	15.0	2.50	2.00
2189 Guscio fond.	2133	1855	1854	2132	3	15.0	2.50	2.00
2190 Guscio fond.	2119	2134	2136	2120	3	15.0	2.50	2.00
2191 Guscio fond.	1909	2144	2135	2116	3	15.0	2.50	2.00
2192 Guscio fond.	2135	1857	1856	2133	3	15.0	2.50	2.00
2193 Guscio fond.	2145	1843	1842	2141	3	15.0	2.50	2.00
2194 Guscio fond.	2138	1846	1845	2139	3	15.0	2.50	2.00
2195 Guscio fond.	2116	2135	2133	2117	3	15.0	2.50	2.00
2196 Guscio fond.	2121	2137	2130		3	15.0	2.50	2.00
2197 Guscio fond.	2136	1851	1850		3	15.0	2.50	2.00
2198 Guscio fond.	2142	1840	1839		3	15.0	2.50	2.00

2199 Guscio fond.	2128	1838	1837		3	15.0	2.50	2.00
2200 Guscio fond.	2132	1854	1853		3	15.0	2.50	2.00
2201 Guscio fond.	2138	1847	1846		3	15.0	2.50	2.00
2202 Guscio fond.	2133	1856	1855		3	15.0	2.50	2.00
2203 Guscio fond.	2146	1893	956	1909	3	15.0	2.50	2.00
2204 Guscio fond.	425	427	1893	2146	3	15.0	2.50	2.00
2205 Guscio fond.	1894	2147	1905	895	3	15.0	2.50	2.00
2206 Guscio fond.	456	420	2147	1894	3	15.0	2.50	2.00
2207 Guscio fond.	2156	2174	2175	2157	3	15.0	2.50	2.00
2208 Guscio fond.	2177	1758	1759	2178	3	15.0	2.50	2.00
2209 Guscio fond.	2174	1753	1754	2175	3	15.0	2.50	2.00
2210 Guscio fond.	2152	2169	2171	2153	3	15.0	2.50	2.00
2211 Guscio fond.	2149	2162	2168	2150	3	15.0	2.50	2.00
2212 Guscio fond.	2173	1752	1753	2174	3	15.0	2.50	2.00
2213 Guscio fond.	2158	2176	2177	2159	3	15.0	2.50	2.00
2214 Guscio fond.	2172	1749	1750	2163	3	15.0	2.50	2.00
2215 Guscio fond.	426	235	1739	2164	3	15.0	2.50	2.00
2216 Guscio fond.	2170	1740	1741	2162	3	15.0	2.50	2.00
2217 Guscio fond.	2148	2170	2162	2149	3	15.0	2.50	2.00
2218 Guscio fond.	2154	2163	2173	2155	3	15.0	2.50	2.00
2219 Guscio fond.	426	2164	2170	2148	3	15.0	2.50	2.00
2220 Guscio fond.	2176	1757	1758	2177	3	15.0	2.50	2.00
2221 Guscio fond.	2159	2177	2178	2160	3	15.0	2.50	2.00
2222 Guscio fond.	2163	1750	1751	2173	3	15.0	2.50	2.00
2223 Guscio fond.	2162	1741	1742	2168	3	15.0	2.50	2.00
2224 Guscio fond.	2180	1745	1746	2169	3	15.0	2.50	2.00
2225 Guscio fond.	2171	1748	1749	2172	3	15.0	2.50	2.00
2226 Guscio fond.	2151	2180	2169	2152	3	15.0	2.50	2.00
2227 Guscio fond.	2166	1743	1744	2167	3	15.0	2.50	2.00
2228 Guscio fond.	2167	1744	1745	2180	3	15.0	2.50	2.00
2229 Guscio fond.	2150	2167	2180	2151	3	15.0	2.50	2.00
2230 Guscio fond.	2153	2171	2172	2154	3	15.0	2.50	2.00
2231 Guscio fond.	2155	2173	2174	2156	3	15.0	2.50	2.00
2232 Guscio fond.	2179	1761	1762	2181	3	15.0	2.50	2.00
2233 Guscio fond.	2175	1755	1756	2176	3	15.0	2.50	2.00
2234 Guscio fond.	2181	1762	427	425	3	15.0	2.50	2.00
2235 Guscio fond.	2161	2179	2181	425	3	15.0	2.50	2.00
2236 Guscio fond.	2168	2166	2167	2150	3	15.0	2.50	2.00
2237 Guscio fond.	2169	1747	1748	2171	3	15.0	2.50	2.00
2238 Guscio fond.	2168	1742	1743	2166	3	15.0	2.50	2.00
2239 Guscio fond.	2165	1760	1761	2179	3	15.0	2.50	2.00
2240 Guscio fond.	2157	2175	2176	2158	3	15.0	2.50	2.00
2241 Guscio fond.	2164	1739	1740	2170	3	15.0	2.50	2.00
2242 Guscio fond.	2160	2165	2179	2161	3	15.0	2.50	2.00
2243 Guscio fond.	2178	1759	1760	2165	3	15.0	2.50	2.00
2244 Guscio fond.	2176	1756	1757		3	15.0	2.50	2.00
2245 Guscio fond.	2173	1751	1752		3	15.0	2.50	2.00
2246 Guscio fond.	2175	1754	1755		3	15.0	2.50	2.00
2247 Guscio fond.	2154	2172	2163		3	15.0	2.50	2.00
2248 Guscio fond.	2169	1746	1747		3	15.0	2.50	2.00
2249 Guscio fond.	2160	2178	2165		3	15.0	2.50	2.00
2250 Guscio fond.	2199	2194	2195	2213	3	15.0	2.50	2.00
2251 Guscio fond.	1781	2210	2211	1782	3	15.0	2.50	2.00
2252 Guscio fond.	2210	2192	2193	2211	3	15.0	2.50	2.00
2253 Guscio fond.	2197	2188	2189	2207	3	15.0	2.50	2.00
2254 Guscio fond.	1771	2203	2205	1772	3	15.0	2.50	2.00
2255 Guscio fond.	2196	2183	2184	2201	3	15.0	2.50	2.00
2256 Guscio fond.	1776	2207	2208	1777	3	15.0	2.50	2.00

2257 Guscio fond.	2209	2191	2192	2210	3	15.0	2.50	2.00
2258 Guscio fond.	1765	2196	2201	1766	3	15.0	2.50	2.00
2259 Guscio fond.	2203	2186	2187	2205	3	15.0	2.50	2.00
2260 Guscio fond.	1763	2198	2204	1764	3	15.0	2.50	2.00
2261 Guscio fond.	2205	2187	2188	2206	3	15.0	2.50	2.00
2262 Guscio fond.	293	423	2198	1763	3	15.0	2.50	2.00
2263 Guscio fond.	1782	2211	2212	1783	3	15.0	2.50	2.00
2264 Guscio fond.	2211	2193	2194	2212	3	15.0	2.50	2.00
2265 Guscio fond.	2204	2182	2183	2196	3	15.0	2.50	2.00
2266 Guscio fond.	1764	2204	2196	1765	3	15.0	2.50	2.00
2267 Guscio fond.	1784	2199	2213	1785	3	15.0	2.50	2.00
2268 Guscio fond.	1779	2209	2210	1780	3	15.0	2.50	2.00
2269 Guscio fond.	2214	2185	2186	2203	3	15.0	2.50	2.00
2270 Guscio fond.	1769	2214	2203	1770	3	15.0	2.50	2.00
2271 Guscio fond.	1768	2202	2214	1769	3	15.0	2.50	2.00
2272 Guscio fond.	1773	2206	2197	1774	3	15.0	2.50	2.00
2273 Guscio fond.	2207	2189	2190	2208	3	15.0	2.50	2.00
2274 Guscio fond.	1772	2205	2206	1773	3	15.0	2.50	2.00
2275 Guscio fond.	2208	2190	2191	2209	3	15.0	2.50	2.00
2276 Guscio fond.	1774	2197	2207	1775	3	15.0	2.50	2.00
2277 Guscio fond.	1786	2215	420	456	3	15.0	2.50	2.00
2278 Guscio fond.	2202	2184	2185	2214	3	15.0	2.50	2.00
2279 Guscio fond.	1766	2201	2200	1767	3	15.0	2.50	2.00
2280 Guscio fond.	2198	423	2182	2204	3	15.0	2.50	2.00
2281 Guscio fond.	1767	2200	2202	1768	3	15.0	2.50	2.00
2282 Guscio fond.	1785	2213	2215	1786	3	15.0	2.50	2.00
2283 Guscio fond.	1783	2212	2199	1784	3	15.0	2.50	2.00
2284 Guscio fond.	2201	2184	2202	2200	3	15.0	2.50	2.00
2285 Guscio fond.	2213	2195	420	2215	3	15.0	2.50	2.00
2286 Guscio fond.	1777	2208	2209	1778	3	15.0	2.50	2.00
2287 Guscio fond.	1780	2210	1781		3	15.0	2.50	2.00
2288 Guscio fond.	1776	1775	2207		3	15.0	2.50	2.00
2289 Guscio fond.	1770	2203	1771		3	15.0	2.50	2.00
2290 Guscio fond.	2199	2212	2194		3	15.0	2.50	2.00
2291 Guscio fond.	1779	1778	2209		3	15.0	2.50	2.00
2292 Guscio fond.	2197	2206	2188		3	15.0	2.50	2.00
2293 Guscio fond.	2231	2223	2229	2222	3	15.0	2.50	2.00
2294 Guscio fond.	2221	2220	2231	2224	3	15.0	2.50	2.00
2295 Guscio fond.	2228	2226	254	251	3	15.0	2.50	2.00
2296 Guscio fond.	2224	2231	2222	2233	3	15.0	2.50	2.00
2297 Guscio fond.	2225	2217	1	263	3	15.0	2.50	2.00
2298 Guscio fond.	2220	2219	2223	2231	3	15.0	2.50	2.00
2299 Guscio fond.	2226	2227	257	254	3	15.0	2.50	2.00
2300 Guscio fond.	2233	2222	242	238	3	15.0	2.50	2.00
2301 Guscio fond.	2229	2232	248	245	3	15.0	2.50	2.00
2302 Guscio fond.	2224	2233	238	235	3	15.0	2.50	2.00
2303 Guscio fond.	2222	2229	245	242	3	15.0	2.50	2.00
2304 Guscio fond.	2229	2223	2228	2232	3	15.0	2.50	2.00
2305 Guscio fond.	2216	2221	2224	426	3	15.0	2.50	2.00
2306 Guscio fond.	2218	2217	2225	2230	3	15.0	2.50	2.00
2307 Guscio fond.	2232	2228	251	248	3	15.0	2.50	2.00
2308 Guscio fond.	2230	2225	2227	2226	3	15.0	2.50	2.00
2309 Guscio fond.	2227	2225	263	260	3	15.0	2.50	2.00
2310 Guscio fond.	2223	2230	2226	2228	3	15.0	2.50	2.00
2311 Guscio fond.	2219	2218	2230	2223	3	15.0	2.50	2.00
2312 Guscio fond.	426	2224	235		3	15.0	2.50	2.00
2313 Guscio fond.	257	2227	260		3	15.0	2.50	2.00
2314 Guscio fond.	2243	1733	290	287	3	15.0	2.50	2.00

2315	Guscio fond.	1738	2245	1733	2243	3	15.0	2.50	2.00
2316	Guscio fond.	2239	2246	278	275	3	15.0	2.50	2.00
2317	Guscio fond.	2246	1734	281	278	3	15.0	2.50	2.00
2318	Guscio fond.	2235	2234	423	2245	3	15.0	2.50	2.00
2319	Guscio fond.	2242	2240	269	266	3	15.0	2.50	2.00
2320	Guscio fond.	2241	2244	1734	2246	3	15.0	2.50	2.00
2321	Guscio fond.	2241	1738	2243	2244	3	15.0	2.50	2.00
2322	Guscio fond.	1737	2241	2246	2239	3	15.0	2.50	2.00
2323	Guscio fond.	2244	2243	287	284	3	15.0	2.50	2.00
2324	Guscio fond.	2217	2242	266	1	3	15.0	2.50	2.00
2325	Guscio fond.	2237	2236	1738	2241	3	15.0	2.50	2.00
2326	Guscio fond.	2236	2235	2245	1738	3	15.0	2.50	2.00
2327	Guscio fond.	2240	2239	275	272	3	15.0	2.50	2.00
2328	Guscio fond.	2242	1737	2239	2240	3	15.0	2.50	2.00
2329	Guscio fond.	1734	2244	284	281	3	15.0	2.50	2.00
2330	Guscio	1531	1703	1699	1532	3	15.0		
2331	Guscio	2263	2261	2251	2252	3	15.0		
2332	Guscio	1248	1250	1736	2264	3	15.0		
2333	Guscio	1254	1233	2265	2266	3	15.0		
2334	Guscio	1234	1236	2263	2265	3	15.0		
2335	Guscio	1246	1248	2264	2262	3	15.0		
2336	Guscio	1262	1260	2267	2257	3	15.0		
2337	Guscio	1264	1262	2257	2270	3	15.0		
2338	Guscio	2270	2257	2260	1735	3	15.0		
2339	Guscio	2261	2262	2250	2251	3	15.0		
2340	Guscio	2262	2264	2249	2250	3	15.0		
2341	Guscio	1517	1272	2256	2248	3	15.0		
2342	Guscio	2258	1735	2260	2255	3	15.0		
2343	Guscio	1238	1240	2261	2263	3	15.0		
2344	Guscio	2265	2263	2252	2259	3	15.0		
2345	Guscio	1270	1268	1735	2258	3	15.0		
2346	Guscio	1268	1266	2270	1735	3	15.0		
2347	Guscio	2266	2265	2259	2269	3	15.0		
2348	Guscio	1252	1489	2247	1736	3	15.0		
2349	Guscio	1242	1244	2262	2261	3	15.0		
2350	Guscio	1258	1256	2266	2267	3	15.0		
2351	Guscio	2257	2267	2268	2260	3	15.0		
2352	Guscio	2264	1736	2247	2249	3	15.0		
2353	Guscio	2269	2259	2252	2253	3	15.0		
2354	Guscio	1272	2258	2255	2256	3	15.0		
2355	Guscio	2267	2266	2269	2268	3	15.0		
2356	Guscio	2268	2269	2253	2254	3	15.0		
2357	Guscio	2260	2268	2254	2255	3	15.0		
2358	Guscio	1256	1254	2266		3	15.0		
2359	Guscio	1233	1234	2265		3	15.0		
2360	Guscio	1244	1246	2262		3	15.0		
2361	Guscio	1250	1252	1736		3	15.0		
2362	Guscio	1266	1264	2270		3	15.0		
2363	Guscio	1240	1242	2261		3	15.0		
2364	Guscio	1260	1258	2267		3	15.0		
2365	Guscio	1272	1270	2258		3	15.0		
2366	Guscio	1236	1238	2263		3	15.0		
2367	Setto	604	234	2272	2271	3	15.0		
2368	Setto	234	655	2273	2272	3	15.0		
2369	Setto	655	656	2274	2273	3	15.0		
2370	Setto	656	657	2275	2274	3	15.0		
2371	Setto	657	658	2276	2275	3	15.0		
2372	Setto	658	659	2277	2276	3	15.0		

2373	Setto	659	660	2278	2277	3	15.0
2374	Setto	660	661	2279	2278	3	15.0
2375	Setto	661	662	2280	2279	3	15.0
2376	Setto	662	663	2281	2280	3	15.0
2377	Setto	663	664	2282	2281	3	15.0
2378	Setto	664	665	2283	2282	3	15.0
2379	Setto	665	666	2284	2283	3	15.0
2380	Setto	666	667	2285	2284	3	15.0
2381	Setto	667	668	2286	2285	3	15.0
2382	Setto	668	669	2287	2286	3	15.0
2383	Setto	669	670	2288	2287	3	15.0
2384	Setto	670	671	2289	2288	3	15.0
2385	Setto	671	672	2290	2289	3	15.0
2386	Setto	672	673	2291	2290	3	15.0
2387	Setto	673	674	2292	2291	3	15.0
2388	Setto	674	675	2293	2292	3	15.0
2389	Setto	675	676	2294	2293	3	15.0
2390	Setto	676	677	2295	2294	3	15.0
2391	Setto	677	678	2296	2295	3	15.0
2392	Setto	678	417	2297	2296	3	15.0
2393	Setto	417	630	2298	2297	3	15.0
2394	Setto	630	1516	2299	2298	3	15.0
2395	Setto	1516	1520	2300	2299	3	15.0
2396	Setto	1520	1521	2301	2300	3	15.0
2397	Setto	1521	1522	2302	2301	3	15.0
2398	Setto	1522	1523	2303	2302	3	15.0
2399	Setto	1523	1524	2304	2303	3	15.0
2400	Setto	1524	1525	2305	2304	3	15.0
2401	Setto	1525	1526	2306	2305	3	15.0
2402	Setto	1526	1527	2307	2306	3	15.0
2403	Setto	1527	1528	2308	2307	3	15.0
2404	Setto	1528	1529	2309	2308	3	15.0
2405	Setto	1529	1530	2310	2309	3	15.0
2406	Setto	1530	1531	2311	2310	3	15.0
2407	Setto	1531	1532	2312	2311	3	15.0
2408	Setto	1532	1533	2313	2312	3	15.0
2409	Setto	1533	1534	2314	2313	3	15.0
2410	Setto	1534	1535	2315	2314	3	15.0
2411	Setto	1535	1536	2316	2315	3	15.0
2412	Setto	1536	1537	2317	2316	3	15.0
2413	Setto	1537	1538	2318	2317	3	15.0
2414	Setto	1538	1539	2319	2318	3	15.0
2415	Setto	1539	1540	2320	2319	3	15.0
2416	Setto	1540	1541	2321	2320	3	15.0
2417	Setto	1541	1542	2322	2321	3	15.0
2418	Setto	1542	1543	2323	2322	3	15.0
2419	Setto	1543	1517	2324	2323	3	15.0
2420	Setto	1517	2248	2325	2324	3	15.0
2421	Setto	603	416	2335	2336	3	15.0
2422	Setto	416	775	2337	2335	3	15.0
2423	Setto	775	776	2338	2337	3	15.0
2424	Setto	776	777	2339	2338	3	15.0
2425	Setto	777	778	2340	2339	3	15.0
2426	Setto	778	779	2341	2340	3	15.0
2427	Setto	779	780	2342	2341	3	15.0
2428	Setto	780	781	2343	2342	3	15.0
2429	Setto	781	782	2344	2343	3	15.0
2430	Setto	782	783	2345	2344	3	15.0

2431	Setto	783	784	2346	2345	3	15.0
2432	Setto	784	785	2347	2346	3	15.0
2433	Setto	785	786	2348	2347	3	15.0
2434	Setto	786	787	2349	2348	3	15.0
2435	Setto	787	788	2350	2349	3	15.0
2436	Setto	788	789	2351	2350	3	15.0
2437	Setto	789	790	2352	2351	3	15.0
2438	Setto	790	791	2353	2352	3	15.0
2439	Setto	791	792	2354	2353	3	15.0
2440	Setto	792	793	2355	2354	3	15.0
2441	Setto	793	794	2356	2355	3	15.0
2442	Setto	794	795	2357	2356	3	15.0
2443	Setto	795	796	2358	2357	3	15.0
2444	Setto	796	797	2359	2358	3	15.0
2445	Setto	797	798	2360	2359	3	15.0
2446	Setto	798	419	2361	2360	3	15.0
2447	Setto	419	629	2362	2361	3	15.0
2448	Setto	629	1490	2363	2362	3	15.0
2449	Setto	1490	1492	2364	2363	3	15.0
2450	Setto	1492	1493	2365	2364	3	15.0
2451	Setto	1493	1494	2366	2365	3	15.0
2452	Setto	1494	1495	2367	2366	3	15.0
2453	Setto	1495	1496	2368	2367	3	15.0
2454	Setto	1496	1497	2369	2368	3	15.0
2455	Setto	1497	1498	2370	2369	3	15.0
2456	Setto	1498	1499	2371	2370	3	15.0
2457	Setto	1499	1500	2372	2371	3	15.0
2458	Setto	1500	1501	2373	2372	3	15.0
2459	Setto	1501	1502	2374	2373	3	15.0
2460	Setto	1502	1503	2375	2374	3	15.0
2461	Setto	1503	1504	2376	2375	3	15.0
2462	Setto	1504	1505	2377	2376	3	15.0
2463	Setto	1505	1506	2378	2377	3	15.0
2464	Setto	1506	1507	2379	2378	3	15.0
2465	Setto	1507	1508	2380	2379	3	15.0
2466	Setto	1508	1509	2381	2380	3	15.0
2467	Setto	1509	1510	2382	2381	3	15.0
2468	Setto	1510	1511	2383	2382	3	15.0
2469	Setto	1511	1512	2384	2383	3	15.0
2470	Setto	1512	1513	2385	2384	3	15.0
2471	Setto	1513	1514	2386	2385	3	15.0
2472	Setto	1514	1515	2387	2386	3	15.0
2473	Setto	1515	1489	2388	2387	3	15.0
2474	Setto	1489	2247	2334	2388	3	15.0
2475	Setto	2325	2326	2256	2248	3	15.0
2476	Setto	2326	2327	2255	2256	3	15.0
2477	Setto	2327	2328	2254	2255	3	15.0
2478	Setto	2328	2329	2253	2254	3	15.0
2479	Setto	2329	2330	2252	2253	3	15.0
2480	Setto	2330	2331	2251	2252	3	15.0
2481	Setto	2331	2332	2250	2251	3	15.0
2482	Setto	2332	2333	2249	2250	3	15.0
2483	Setto	2333	2334	2247	2249	3	15.0
2484	Setto	2271	2389	612	604	3	15.0
2485	Setto	2389	2390	611	612	3	15.0
2486	Setto	2390	2391	610	611	3	15.0
2487	Setto	2391	2392	609	610	3	15.0
2488	Setto	2392	2395	608	609	3	15.0

2489	Setto	2395	2393	607	608	3	15.0
2490	Setto	2393	2396	606	607	3	15.0
2491	Setto	2396	2394	605	606	3	15.0
2492	Setto	2394	2336	603	605	3	15.0

10. MODELLAZIONE DELLE AZIONI

Il programma consente l'uso di diverse tipologie di carico (azioni). Le azioni utilizzate nella modellazione sono individuate da una sigla identificativa ed un codice numerico (gli elementi strutturali richiamano quest'ultimo nella propria descrizione). Per ogni azione applicata alla struttura viene di riportato il codice, il tipo e la sigla identificativa. Le tabelle successive dettagliano i valori caratteristici di ogni azione in relazione al tipo. Le tabelle riportano infatti i seguenti dati in relazione al tipo:

1	carico concentrato nodale 6 dati (forza Fx, Fy, Fz, momento Mx, My, Mz)
2	spostamento nodale impresso 6 dati (spostamento Tx,Ty,Tz, rotazione Rx,Ry,Rz)
3	carico distribuito globale su elemento tipo trave 7 dati (fx,fy,fz,mx,my,mz,ascissa di inizio carico) 7 dati (fx,fy,fz,mx,my,mz,ascissa di fine carico)
4	carico distribuito locale su elemento tipo trave 7 dati (f1,f2,f3,m1,m2,m3,ascissa di inizio carico) 7 dati (f1,f2,f3,m1,m2,m3,ascissa di fine carico)
5	carico concentrato globale su elemento tipo trave 7 dati (Fx,Fy,Fz,Mx,My,Mz,ascissa di carico)
6	carico concentrato locale su elemento tipo trave 7 dati (F1, F2, F3, M1, M2, M3, ascissa di carico)
7	variazione termica applicata ad elemento tipo trave 7 dati (variazioni termiche: uniforme, media e differenza in altezza e larghezza al nodo iniziale e finale)
8	carico di pressione uniforme su elemento tipo piastra 1 dato (pressione)
9	carico di pressione variabile su elemento tipo piastra 4 dati (pressione, quota, pressione, quota)
10	variazione termica applicata ad elemento tipo piastra 2 dati (variazioni termiche: media e differenza nello spessore)
11	carico variabile generale su elementi tipo trave e piastra 1 dato descrizione della tipologia 4 dati per segmento (posizione, valore, posizione, valore) la tipologia precisa l'ascissa di definizione, la direzione del carico, la modalità di carico e la larghezza d'influenza per gli elementi tipo trave
12	gruppo di carichi con impronta su piastra 9 dati (numero di ripetizioni in direzione X e Y, valore di ciascun carico, posizione centrale del primo, dimensioni dell' impronta, interasse tra i carichi

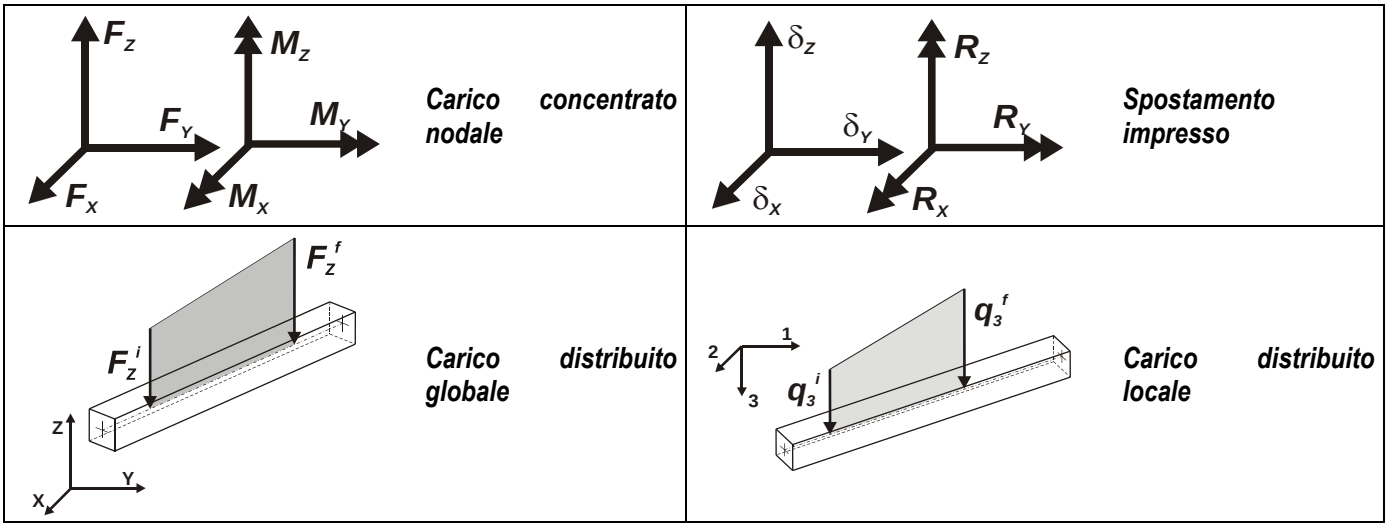

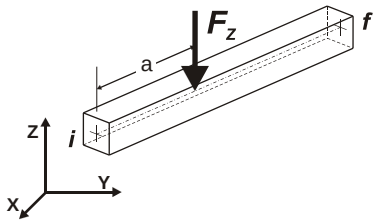

Carico concentrato globale

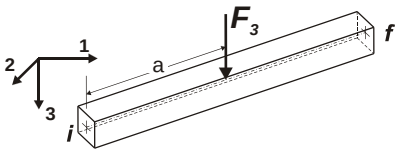

Carico concentrato locale

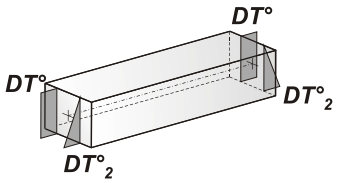

Carico termico 2D

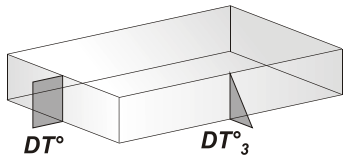

Carico termico 3D

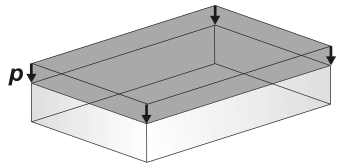

Carico pressione uniforme

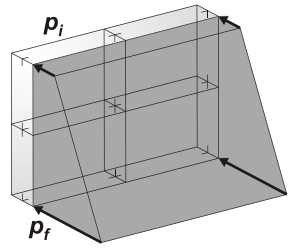

Carico pressione variabile

Tipo	carico variabile generale

Id	Tipo	ascissa	valore	ascissa	valore
		m	daN/ m2	m	daN/ m2
1	NEVE				
	Y - Y Qz Area L2=0.0	0.0	0.0	343.00	-140.00
2	MANTO COPERTURA				
	Y - Y Qz Area L2=0.0	0.0	0.0	343.00	-30.00
3	SOVRACCARICO LOCULI				
	Y - Y Qz Area L2=0.0	0.0	-400.00	1000.00	-400.00
4	SOVRACCARICO FOLLA				
	X - X Qz Area L2=0.0	0.0	-300.00	1200.00	-300.00

11. SCHEMATIZZAZIONE DEI CASI DI CARICO

Il programma consente l'applicazione di diverse tipologie di casi di carico.
Sono previsti i seguenti 11 tipi di casi di carico:

	Sigla	*Tipo*	*Descrizione*
1	*Ggk*	*A*	*caso di carico comprensivo del peso proprio struttura*
2	*Gk*	*NA*	*caso di carico con azioni permanenti*
3	*Qk*	*NA*	*caso di carico con azioni variabili*
4	*Gsk*	*A*	*caso di carico comprensivo dei carichi permanenti sui solai e sulle coperture*
5	*Qsk*	*A*	*caso di carico comprensivo dei carichi variabili sui solai*
6	*Qnk*	*A*	*caso di carico comprensivo dei carichi di neve sulle coperture*
7	*Qtk*	*SA*	*caso di carico comprensivo di una variazione termica agente sulla struttura*
8	*Qvk*	*NA*	*caso di carico comprensivo di azioni da vento sulla struttura*
9	*Esk*	*SA*	*caso di carico sismico con analisi statica equivalente*
10	*Edk*	*SA*	*caso di carico sismico con analisi dinamica*
11	*Etk*	*NA*	*caso di carico comprensivo di azioni derivanti dall' incremento di spinta delle terre in condizione sismica*
12	*Pk*	*NA*	*caso di carico comprensivo di azioni derivanti da coazioni, cedimenti e precompressioni*

Sono di tipo automatico A (ossia non prevedono introduzione dati da parte dell'utente) i seguenti casi di carico: 1-Ggk; 4-Gsk; 5-Qsk; 6-Qnk.

Sono di tipo semi-automatico SA (ossia prevedono una minima introduzione dati da parte dell'utente) i seguenti casi di carico:
7-Qtk, in quanto richiede solo il valore della variazione termica;
9-Esk e 10-Edk, in quanto richiedono il valore dell'angolo di ingresso del sisma e l'individuazione dei casi di carico partecipanti alla definizione delle masse.

Sono di tipo non automatico NA ossia prevedono la diretta applicazione di carichi generici agli elementi strutturali (si veda il precedente punto Modellazione delle Azioni) i restanti casi di carico.

Nella tabella successiva vengono riportati i casi di carico agenti sulla struttura, con l'indicazione dei dati relativi al caso di carico stesso:
Numero Tipo e Sigla identificativa, Valore di riferimento del caso di carico (se previsto).

In successione, per i casi di carico non automatici, viene riportato l'elenco di nodi ed elementi direttamente caricati con la sigla identificativa del carico.

Per i casi di carico di tipo sismico (9-Esk e 10-Edk), viene riportata la tabella di definizione delle masse: per ogni caso di carico partecipante alla definizione delle masse viene indicata la relativa aliquota (partecipazione) considerata. Si precisa che per i caso di carico 5-Qsk e 6-Qnk la partecipazione è prevista localmente per ogni elemento solaio o copertura presente nel modello (si confronti il valore Sksol nel capitolo relativo agli elementi solaio) e pertanto la loro partecipazione è di norma pari a uno.

CDC	**Tipo**	**Sigla Id**	**Note**
1	Ggk	CDC=Ggk (peso proprio della struttura)	
2	Edk	CDC=Ed (dinamico SLU) alfa=0.0 (ecc. +)	partecipazione:1.00 per 1 CDC=Ggk (peso proprio della struttura)
			partecipazione:0.80 per 10 CDC=Qk NEVE
			partecipazione:1.00 per 11 CDC=G2k MANTO COPERTURA
			partecipazione:1.00 per 12 CDC=G2k LOCULI
			partecipazione:0.80 per 13 CDC=Qk FOLLA
3	Edk	CDC=Ed (dinamico SLU) alfa=0.0 (ecc. -)	come precedente CDC sismico
4	Edk	CDC=Ed (dinamico SLU) alfa=90.00 (ecc. +)	come precedente CDC sismico
5	Edk	CDC=Ed (dinamico SLU) alfa=90.00 (ecc. -)	come precedente CDC sismico
6	Edk	CDC=Ed (dinamico SLD) alfa=0.0 (ecc. +)	come precedente CDC sismico

CDC	Tipo	Sigla Id	Note
7	Edk	CDC=Ed (dinamico SLD) alfa=0.0 (ecc. -)	come precedente CDC sismico
8	Edk	CDC=Ed (dinamico SLD) alfa=90.00 (ecc. +)	come precedente CDC sismico
9	Edk	CDC=Ed (dinamico SLD) alfa=90.00 (ecc. -)	come precedente CDC sismico
10	Qk	CDC=Qk NEVE	D3 :da 521 a 656 Azione : NEVE
			D3 :da 658 a 793 Azione : NEVE
			D3 :da 795 a 864 Azione : NEVE
			D3 :da 1385 a 1630 Azione : NEVE
			D3 :da 1632 a 1681 Azione : NEVE
			D3 : 1684 Azione : NEVE
			D3 :da 2330 a 2366 Azione : NEVE
11	Gk	CDC=G2k MANTO COPERTURA	D3 :da 521 a 656 Azione : MANTO COPERTURA
			D3 :da 658 a 793 Azione : MANTO COPERTURA
			D3 :da 795 a 864 Azione : MANTO COPERTURA
			D3 :da 1385 a 1630 Azione : MANTO COPERTURA
			D3 :da 1632 a 1681 Azione : MANTO COPERTURA
			D3 : 1684 Azione : MANTO COPERTURA
			D3 :da 2330 a 2366 Azione : MANTO COPERTURA
12	Gk	CDC=G2k LOCULI	D3 :da 1685 a 1862 Azione : SOVRACCARICO LOCULI
			D3 :da 1903 a 2080 Azione : SOVRACCARICO LOCULI
13	Qk	CDC=Qk FOLLA	D3 : 657 Azione : SOVRACCARICO FOLLA
			D3 : 794 Azione : SOVRACCARICO FOLLA
			D3 : 1631 Azione : SOVRACCARICO FOLLA
			D3 :da 1682 a 1683 Azione : SOVRACCARICO FOLLA
			D3 :da 1863 a 1902 Azione : SOVRACCARICO FOLLA
			D3 :da 2081 a 2329 Azione : SOVRACCARICO FOLLA

12. DEFINIZIONE DELLE COMBINAZIONI

Il programma combina i diversi tipi di casi di carico (CDC) secondo le regole previste dalla normativa vigente.
Le combinazioni previste sono destinate al controllo di sicurezza della struttura ed alla verifica degli spostamenti e delle sollecitazioni. La prima tabella delle combinazioni riportata di seguito comprende le seguenti informazioni: Numero, Tipo, Sigla identificativa. Una seconda tabella riporta il peso nella combinazione assunto per ogni caso di carico.

Ai fini delle verifiche degli stati limite si definiscono le seguenti combinazioni delle azioni:

Combinazione fondamentale SLU

$\gamma_{G1} \cdot G1 + \gamma_{G2} \cdot G2 + \gamma_P \cdot P + \gamma_{Q1} \cdot Qk1 + \gamma_{Q2} \cdot \psi_{02} \cdot Q_{k2} + \gamma_{Q3} \cdot \psi_{03} \cdot Q_{k3} + \ldots$

Combinazione caratteristica (rara) SLE

$G1 + G2 + P + Q_{k1} + \psi_{02} \cdot Q_{k2} + \psi_{03} \cdot Q_{k3} + \ldots$

Combinazione frequente SLE

$G1 + G2 + P + \psi_{11} \cdot Q_{k1} + \psi_{22} \cdot Q_{k2} + \psi_{23} \cdot Q_{k3} + \ldots$

Combinazione quasi permanente SLE

$G1 + G2 + P + \psi_{21} \cdot Q_{k1} + \psi_{22} \cdot Q_{k2} + \psi_{23} \cdot Q_{k3} + \ldots$

Combinazione sismica, impiegata per gli stati limite ultimi e di esercizio connessi all'azione sismica E

$E + G1 + G2 + P + \psi_{21} \cdot Q_{k1} + \psi_{22} \cdot Q_{k2} + \ldots$

Combinazione eccezionale, impiegata per gli stati limite connessi alle azioni eccezionali

$G1 + G2 + P + \psi_{21} \cdot Q_{k1} + \psi_{22} \cdot Q_{k2} + \ldots$

Dove:

NTC 2008 Tabella 2.5.I

Destinazione d'uso/azione	**ψ0**	**ψ1**	**ψ2**
Categoria A residenziali	0,70	0,50	0,30
Categoria B uffici	0,70	0,50	0,30
Categoria C ambienti suscettibili di affollamento	0,70	0,70	0,60
Categoria D ambienti ad uso commerciale	0,70	0,70	0,60
Categoria E biblioteche, archivi, magazzini,…	1,00	0,90	0,80
Categoria F Rimesse e parcheggi (autoveicoli <= 30kN)	0,70	0,70	0,60
Categoria G Rimesse e parcheggi (autoveicoli > 30kN)	0,70	0,50	0,30
Categoria H Coperture	0,00	0,00	0,00
Vento	0,60	0,20	0,00
Neve a quota <= 1000 m	0,50	0,20	0,00
Neve a quota > 1000 m	0,70	0,50	0,20
Variazioni Termiche	0,60	0,50	0,00

Nelle verifiche possono essere adottati in alternativa due diversi approcci progettuali:
- per l'approccio 1 si considerano due diverse combinazioni di gruppi di coefficienti di sicurezza parziali per le azioni, per i materiali e per la resistenza globale (combinazione 1 con coefficienti A1 e combinazione 2 con coefficienti A2),
- per l'approccio 2 si definisce un'unica combinazione per le azioni, per la resistenza dei materiali e per la resistenza globale (con coefficienti A1).

NTC 2008 Tabella 2.6.I

		Coefficiente γf	EQU	A1	A2
Carichi permanenti	Favorevoli Sfavorevoli	γ_{G1}	0,9 1,1	1,0 1,3	1,0 1,0
Carichi permanenti non strutturali (Non compiutamente definiti)	Favorevoli Sfavorevoli	γ_{G2}	0,0 1,5	0,0 1,5	0,0 1,3
Carichi variabili	Favorevoli Sfavorevoli	γ_{Qi}	0,0 1,5	0,0 1,5	0,0 1,3

Cmb	Tipo	Sigla Id	effetto P-delta
1	SLU	Comb. SLU A1 1	
2	SLU	Comb. SLU A1 2	
3	SLU	Comb. SLU A1 3	
4	SLU	Comb. SLU A1 4	
5	SLU	Comb. SLU A1 5	
6	SLU	Comb. SLU A1 6	
7	SLU	Comb. SLU A1 7	
8	SLU	Comb. SLU A1 8	
9	SLE(r)	Comb. SLE(rara) 9	
10	SLE(r)	Comb. SLE(rara) 10	
11	SLE(r)	Comb. SLE(rara) 11	
12	SLE(r)	Comb. SLE(rara) 12	
13	SLE(f)	Comb. SLE(freq.) 13	
14	SLE(f)	Comb. SLE(freq.) 14	
15	SLE(f)	Comb. SLE(freq.) 15	
16	SLE(p)	Comb. SLE(perm.) 16	
17	SLU	Comb. SLU A1 (SLV sism.) 17	
18	SLU	Comb. SLU A1 (SLV sism.) 18	
19	SLU	Comb. SLU A1 (SLV sism.) 19	
20	SLU	Comb. SLU A1 (SLV sism.) 20	
21	SLU	Comb. SLU A1 (SLV sism.) 21	
22	SLU	Comb. SLU A1 (SLV sism.) 22	
23	SLU	Comb. SLU A1 (SLV sism.) 23	
24	SLU	Comb. SLU A1 (SLV sism.) 24	
25	SLU	Comb. SLU A1 (SLV sism.) 25	
26	SLU	Comb. SLU A1 (SLV sism.) 26	
27	SLU	Comb. SLU A1 (SLV sism.) 27	
28	SLU	Comb. SLU A1 (SLV sism.) 28	
29	SLU	Comb. SLU A1 (SLV sism.) 29	
30	SLU	Comb. SLU A1 (SLV sism.) 30	
31	SLU	Comb. SLU A1 (SLV sism.) 31	
32	SLU	Comb. SLU A1 (SLV sism.) 32	
33	SLU	Comb. SLU A1 (SLV sism.) 33	
34	SLU	Comb. SLU A1 (SLV sism.) 34	
35	SLU	Comb. SLU A1 (SLV sism.) 35	
36	SLU	Comb. SLU A1 (SLV sism.) 36	
37	SLU	Comb. SLU A1 (SLV sism.) 37	
38	SLU	Comb. SLU A1 (SLV sism.) 38	
39	SLU	Comb. SLU A1 (SLV sism.) 39	
40	SLU	Comb. SLU A1 (SLV sism.) 40	
41	SLU	Comb. SLU A1 (SLV sism.) 41	
42	SLU	Comb. SLU A1 (SLV sism.) 42	
43	SLU	Comb. SLU A1 (SLV sism.) 43	
44	SLU	Comb. SLU A1 (SLV sism.) 44	
45	SLU	Comb. SLU A1 (SLV sism.) 45	
46	SLU	Comb. SLU A1 (SLV sism.) 46	
47	SLU	Comb. SLU A1 (SLV sism.) 47	
48	SLU	Comb. SLU A1 (SLV sism.) 48	
49	SLD(sis)	Comb. SLE (SLD Danno sism.) 49	
50	SLD(sis)	Comb. SLE (SLD Danno sism.) 50	
51	SLD(sis)	Comb. SLE (SLD Danno sism.) 51	
52	SLD(sis)	Comb. SLE (SLD Danno sism.)	

Cmb	Tipo	Sigla Id	effetto P-delta
		52	
53	SLD(sis)	Comb. SLE (SLD Danno sism.) 53	
54	SLD(sis)	Comb. SLE (SLD Danno sism.) 54	
55	SLD(sis)	Comb. SLE (SLD Danno sism.) 55	
56	SLD(sis)	Comb. SLE (SLD Danno sism.) 56	
57	SLD(sis)	Comb. SLE (SLD Danno sism.) 57	
58	SLD(sis)	Comb. SLE (SLD Danno sism.) 58	
59	SLD(sis)	Comb. SLE (SLD Danno sism.) 59	
60	SLD(sis)	Comb. SLE (SLD Danno sism.) 60	
61	SLD(sis)	Comb. SLE (SLD Danno sism.) 61	
62	SLD(sis)	Comb. SLE (SLD Danno sism.) 62	
63	SLD(sis)	Comb. SLE (SLD Danno sism.) 63	
64	SLD(sis)	Comb. SLE (SLD Danno sism.) 64	
65	SLD(sis)	Comb. SLE (SLD Danno sism.) 65	
66	SLD(sis)	Comb. SLE (SLD Danno sism.) 66	
67	SLD(sis)	Comb. SLE (SLD Danno sism.) 67	
68	SLD(sis)	Comb. SLE (SLD Danno sism.) 68	
69	SLD(sis)	Comb. SLE (SLD Danno sism.) 69	
70	SLD(sis)	Comb. SLE (SLD Danno sism.) 70	
71	SLD(sis)	Comb. SLE (SLD Danno sism.) 71	
72	SLD(sis)	Comb. SLE (SLD Danno sism.) 72	
73	SLD(sis)	Comb. SLE (SLD Danno sism.) 73	
74	SLD(sis)	Comb. SLE (SLD Danno sism.) 74	
75	SLD(sis)	Comb. SLE (SLD Danno sism.) 75	
76	SLD(sis)	Comb. SLE (SLD Danno sism.) 76	
77	SLD(sis)	Comb. SLE (SLD Danno sism.) 77	
78	SLD(sis)	Comb. SLE (SLD Danno sism.) 78	
79	SLD(sis)	Comb. SLE (SLD Danno sism.) 79	
80	SLD(sis)	Comb. SLE (SLD Danno sism.)	

Cmb	Tipo	Sigla Id	effetto P-delta
		80	

Cmb	CDC 1/15...	CDC 2/16...	CDC 3/17...	CDC 4/18...	CDC 5/19...	CDC 6/20...	CDC 7/21...	CDC 8/22...	CDC 9/23...	CDC 10/24...	CDC 11/25...	CDC 12/26...	CDC 13/27...	CDC 14/28...
1	1.30	0.0	0.0	0.0	0.0	0.0	0.0	0.0	0.0	0.0	1.50	1.50	1.05	
2	1.30	0.0	0.0	0.0	0.0	0.0	0.0	0.0	0.0	1.50	1.50	1.50	1.05	
3	1.00	0.0	0.0	0.0	0.0	0.0	0.0	0.0	0.0	0.0	0.0	0.0	1.05	
4	1.00	0.0	0.0	0.0	0.0	0.0	0.0	0.0	0.0	1.50	0.0	0.0	1.05	
5	1.30	0.0	0.0	0.0	0.0	0.0	0.0	0.0	0.0	0.0	1.50	1.50	1.50	
6	1.30	0.0	0.0	0.0	0.0	0.0	0.0	0.0	0.0	0.75	1.50	1.50	1.50	
7	1.00	0.0	0.0	0.0	0.0	0.0	0.0	0.0	0.0	0.0	0.0	0.0	1.50	
8	1.00	0.0	0.0	0.0	0.0	0.0	0.0	0.0	0.0	0.75	0.0	0.0	1.50	
9	1.00	0.0	0.0	0.0	0.0	0.0	0.0	0.0	0.0	0.0	1.00	1.00	0.70	
10	1.00	0.0	0.0	0.0	0.0	0.0	0.0	0.0	0.0	1.00	1.00	1.00	0.70	
11	1.00	0.0	0.0	0.0	0.0	0.0	0.0	0.0	0.0	0.0	1.00	1.00	1.00	
12	1.00	0.0	0.0	0.0	0.0	0.0	0.0	0.0	0.0	0.50	1.00	1.00	1.00	
13	1.00	0.0	0.0	0.0	0.0	0.0	0.0	0.0	0.0	0.0	1.00	1.00	0.60	
14	1.00	0.0	0.0	0.0	0.0	0.0	0.0	0.0	0.0	0.20	1.00	1.00	0.60	
15	1.00	0.0	0.0	0.0	0.0	0.0	0.0	0.0	0.0	0.0	1.00	1.00	0.70	
16	1.00	0.0	0.0	0.0	0.0	0.0	0.0	0.0	0.0	0.0	1.00	1.00	0.60	
17	1.00	-1.00	0.0	-0.30	0.0	0.0	0.0	0.0	0.0	0.0	1.00	1.00	0.60	
18	1.00	-1.00	0.0	0.30	0.0	0.0	0.0	0.0	0.0	0.0	1.00	1.00	0.60	
19	1.00	1.00	0.0	-0.30	0.0	0.0	0.0	0.0	0.0	0.0	1.00	1.00	0.60	
20	1.00	1.00	0.0	0.30	0.0	0.0	0.0	0.0	0.0	0.0	1.00	1.00	0.60	
21	1.00	-1.00	0.0	0.0	-0.30	0.0	0.0	0.0	0.0	0.0	1.00	1.00	0.60	
22	1.00	-1.00	0.0	0.0	0.30	0.0	0.0	0.0	0.0	0.0	1.00	1.00	0.60	
23	1.00	1.00	0.0	0.0	-0.30	0.0	0.0	0.0	0.0	0.0	1.00	1.00	0.60	
24	1.00	1.00	0.0	0.0	0.30	0.0	0.0	0.0	0.0	0.0	1.00	1.00	0.60	
25	1.00	0.0	-1.00	-0.30	0.0	0.0	0.0	0.0	0.0	0.0	1.00	1.00	0.60	
26	1.00	0.0	-1.00	0.30	0.0	0.0	0.0	0.0	0.0	0.0	1.00	1.00	0.60	
27	1.00	0.0	1.00	-0.30	0.0	0.0	0.0	0.0	0.0	0.0	1.00	1.00	0.60	
28	1.00	0.0	1.00	0.30	0.0	0.0	0.0	0.0	0.0	0.0	1.00	1.00	0.60	
29	1.00	0.0	-1.00	0.0	-0.30	0.0	0.0	0.0	0.0	0.0	1.00	1.00	0.60	
30	1.00	0.0	-1.00	0.0	0.30	0.0	0.0	0.0	0.0	0.0	1.00	1.00	0.60	
31	1.00	0.0	1.00	0.0	-0.30	0.0	0.0	0.0	0.0	0.0	1.00	1.00	0.60	
32	1.00	0.0	1.00	0.0	0.30	0.0	0.0	0.0	0.0	0.0	1.00	1.00	0.60	
33	1.00	-0.30	0.0	-1.00	0.0	0.0	0.0	0.0	0.0	0.0	1.00	1.00	0.60	
34	1.00	-0.30	0.0	1.00	0.0	0.0	0.0	0.0	0.0	0.0	1.00	1.00	0.60	
35	1.00	0.30	0.0	-1.00	0.0	0.0	0.0	0.0	0.0	0.0	1.00	1.00	0.60	
36	1.00	0.30	0.0	1.00	0.0	0.0	0.0	0.0	0.0	0.0	1.00	1.00	0.60	
37	1.00	0.0	-0.30	-1.00	0.0	0.0	0.0	0.0	0.0	0.0	1.00	1.00	0.60	
38	1.00	0.0	-0.30	1.00	0.0	0.0	0.0	0.0	0.0	0.0	1.00	1.00	0.60	
39	1.00	0.0	0.30	-1.00	0.0	0.0	0.0	0.0	0.0	0.0	1.00	1.00	0.60	
40	1.00	0.0	0.30	1.00	0.0	0.0	0.0	0.0	0.0	0.0	1.00	1.00	0.60	
41	1.00	-0.30	0.0	0.0	-1.00	0.0	0.0	0.0	0.0	0.0	1.00	1.00	0.60	
42	1.00	-0.30	0.0	0.0	1.00	0.0	0.0	0.0	0.0	0.0	1.00	1.00	0.60	
43	1.00	0.30	0.0	0.0	-1.00	0.0	0.0	0.0	0.0	0.0	1.00	1.00	0.60	
44	1.00	0.30	0.0	0.0	1.00	0.0	0.0	0.0	0.0	0.0	1.00	1.00	0.60	
45	1.00	0.0	-0.30	0.0	-1.00	0.0	0.0	0.0	0.0	0.0	1.00	1.00	0.60	
46	1.00	0.0	-0.30	0.0	1.00	0.0	0.0	0.0	0.0	0.0	1.00	1.00	0.60	
47	1.00	0.0	0.30	0.0	-1.00	0.0	0.0	0.0	0.0	0.0	1.00	1.00	0.60	
48	1.00	0.0	0.30	0.0	1.00	0.0	0.0	0.0	0.0	0.0	1.00	1.00	0.60	
49	1.00	0.0	0.0	0.0	0.0	-1.00	0.0	-0.30	0.0	0.0	1.00	1.00	0.60	
50	1.00	0.0	0.0	0.0	0.0	-1.00	0.0	0.30	0.0	0.0	1.00	1.00	0.60	
51	1.00	0.0	0.0	0.0	0.0	1.00	0.0	-0.30	0.0	0.0	1.00	1.00	0.60	

Cmb	CDC 1/15...	CDC 2/16...	CDC 3/17...	CDC 4/18...	CDC 5/19...	CDC 6/20...	CDC 7/21...	CDC 8/22...	CDC 9/23...	CDC 10/24...	CDC 11/25...	CDC 12/26...	CDC 13/27...	CDC 14/28...
52	1.00	0.0	0.0	0.0	0.0	1.00	0.0	0.30	0.0	0.0	1.00	1.00	0.60	
53	1.00	0.0	0.0	0.0	0.0	-1.00	0.0	0.0	-0.30	0.0	1.00	1.00	0.60	
54	1.00	0.0	0.0	0.0	0.0	-1.00	0.0	0.0	0.30	0.0	1.00	1.00	0.60	
55	1.00	0.0	0.0	0.0	0.0	1.00	0.0	0.0	-0.30	0.0	1.00	1.00	0.60	
56	1.00	0.0	0.0	0.0	0.0	1.00	0.0	0.0	0.30	0.0	1.00	1.00	0.60	
57	1.00	0.0	0.0	0.0	0.0	0.0	-1.00	-0.30	0.0	0.0	1.00	1.00	0.60	
58	1.00	0.0	0.0	0.0	0.0	0.0	-1.00	0.30	0.0	0.0	1.00	1.00	0.60	
59	1.00	0.0	0.0	0.0	0.0	0.0	1.00	-0.30	0.0	0.0	1.00	1.00	0.60	
60	1.00	0.0	0.0	0.0	0.0	0.0	1.00	0.30	0.0	0.0	1.00	1.00	0.60	
61	1.00	0.0	0.0	0.0	0.0	0.0	-1.00	0.0	-0.30	0.0	1.00	1.00	0.60	
62	1.00	0.0	0.0	0.0	0.0	0.0	-1.00	0.0	0.30	0.0	1.00	1.00	0.60	
63	1.00	0.0	0.0	0.0	0.0	0.0	1.00	0.0	-0.30	0.0	1.00	1.00	0.60	
64	1.00	0.0	0.0	0.0	0.0	0.0	1.00	0.0	0.30	0.0	1.00	1.00	0.60	
65	1.00	0.0	0.0	0.0	0.0	-0.30	0.0	-1.00	0.0	0.0	1.00	1.00	0.60	
66	1.00	0.0	0.0	0.0	0.0	-0.30	0.0	1.00	0.0	0.0	1.00	1.00	0.60	
67	1.00	0.0	0.0	0.0	0.0	0.30	0.0	-1.00	0.0	0.0	1.00	1.00	0.60	
68	1.00	0.0	0.0	0.0	0.0	0.30	0.0	1.00	0.0	0.0	1.00	1.00	0.60	
69	1.00	0.0	0.0	0.0	0.0	0.0	-0.30	-1.00	0.0	0.0	1.00	1.00	0.60	
70	1.00	0.0	0.0	0.0	0.0	0.0	-0.30	1.00	0.0	0.0	1.00	1.00	0.60	
71	1.00	0.0	0.0	0.0	0.0	0.0	0.30	-1.00	0.0	0.0	1.00	1.00	0.60	
72	1.00	0.0	0.0	0.0	0.0	0.0	0.30	1.00	0.0	0.0	1.00	1.00	0.60	
73	1.00	0.0	0.0	0.0	0.0	-0.30	0.0	0.0	-1.00	0.0	1.00	1.00	0.60	
74	1.00	0.0	0.0	0.0	0.0	-0.30	0.0	0.0	1.00	0.0	1.00	1.00	0.60	
75	1.00	0.0	0.0	0.0	0.0	0.30	0.0	0.0	-1.00	0.0	1.00	1.00	0.60	
76	1.00	0.0	0.0	0.0	0.0	0.30	0.0	0.0	1.00	0.0	1.00	1.00	0.60	
77	1.00	0.0	0.0	0.0	0.0	0.0	-0.30	0.0	-1.00	0.0	1.00	1.00	0.60	
78	1.00	0.0	0.0	0.0	0.0	0.0	-0.30	0.0	1.00	0.0	1.00	1.00	0.60	
79	1.00	0.0	0.0	0.0	0.0	0.0	0.30	0.0	-1.00	0.0	1.00	1.00	0.60	
80	1.00	0.0	0.0	0.0	0.0	0.0	0.30	0.0	1.00	0.0	1.00	1.00	0.60	

13. AZIONE SISMICA

L'azione sismica sulle costruzioni è valutata a partire dalla "pericolosità sismica di base", in condizioni ideali di sito di riferimento rigido con superficie topografica orizzontale.
Allo stato attuale, la pericolosità sismica su reticolo di riferimento nell'intervallo di riferimento è fornita dai dati pubblicati sul sito http://esse1.mi.ingv.it/. Per punti non coincidenti con il reticolo di riferimento e periodi di ritorno non contemplati direttamente si opera come indicato nell' allegato alle NTC (rispettivamente media pesata e interpolazione).

L' azione sismica viene definita in relazione ad un periodo di riferimento Vr che si ricava, per ciascun tipo di costruzione, moltiplicandone la vita nominale per il coefficiente d'uso (vedi tabella Parametri della struttura). Fissato il periodo di riferimento Vr e la probabilità di superamento Pver associata a ciascuno degli stati limite considerati, si ottiene il periodo di ritorno Tr e i relativi parametri di pericolosità sismica (vedi tabella successiva):
ag: accelerazione orizzontale massima del terreno;
Fo: valore massimo del fattore di amplificazione dello spettro in accelerazione orizzontale;
*T*c: periodo di inizio del tratto a velocità costante dello spettro in accelerazione orizzontale;*

Parametri della struttura					
Classe d'uso	Vita Vn [anni]	Coeff. Uso	Periodo Vr [anni]	Tipo di suolo	Categoria topografica
III	100.0	1.50	150.0	C	T1

Individuati su reticolo di riferimento i parametri di pericolosità sismica si valutano i parametri spettrali riportati in tabella:
S è il coefficiente che tiene conto della categoria di sottosuolo e delle condizioni topografiche
*mediante la relazione seguente S = Ss*St (3.2.5)*
Fo è il fattore che quantifica l'amplificazione spettrale massima, su sito di riferimento rigido orizzontale
Fv è il fattore che quantifica l'amplificazione spettrale massima verticale, in termini di accelerazione orizzontale massima del terreno ag su sito di riferimento rigido orizzontale
Tb è il periodo corrispondente all'inizio del tratto dello spettro ad accelerazione costante.
Tc è il periodo corrispondente all'inizio del tratto dello spettro a velocità costante.
Td è il periodo corrispondente all'inizio del tratto dello spettro a spostamento costante.

Id nodo	Longitudine	Latitudine	Distanza
			Km
Loc.	7.524	45.032	
14012	7.483	44.984	6.215
14013	7.553	44.988	5.380
13791	7.548	45.038	1.994
13790	7.478	45.034	3.610

SL	Pver	Tr	ag	Fo	T*c
		Anni	g		sec
SLO	81.0	90.0	0.045	2.580	0.230
SLD	63.0	151.0	0.054	2.600	0.240
SLV	10.0	1424.0	0.109	2.640	0.280
SLC	5.0	2475.0	0.128	2.640	0.290

SL	ag	S	Fo	Fv	Tb	Tc	Td
	g				sec	sec	sec
SLO	0.045	1.500	2.580	0.736	0.131	0.392	1.778
SLD	0.054	1.500	2.600	0.814	0.135	0.404	1.815
SLV	0.109	1.500	2.640	1.177	0.149	0.447	2.036
SLC	0.128	1.497	2.640	1.275	0.153	0.458	2.112

14. RISULTATI ANALISI SISMICHE

Il programma consente l'analisi di diverse configurazioni sismiche.

Sono previsti, infatti, i seguenti casi di carico:
9. Esk caso di carico sismico con analisi statica equivalente
10. Edk caso di carico sismico con analisi dinamica

Ciascun caso di carico è caratterizzato da un angolo di ingresso e da una configurazione di masse determinante la forza sismica complessiva (si rimanda al capitolo relativo ai casi di carico per chiarimenti inerenti questo aspetto).

Nella colonna Note, in funzione della norma in uso sono riportati i parametri fondamentali che caratterizzano l' azione sismica: in particolare possono essere presenti i seguenti valori:

Angolo di ingresso	*Angolo di ingresso dell'azione sismica orizzontale*
Fattore di importanza	*Fattore di importanza dell'edificio, in base alla categoria di appartenenza*
Zona sismica	*Zona sismica*
Accelerazione ag	*Accelerazione orizzontale massima sul suolo*
Categoria suolo	*Categoria di profilo stratigrafico del suolo di fondazione*
Fattore di struttura q	*Fattore dipendente dalla tipologia strutturale*
Fattore di sito S	*Fattore dipendente dalla stratigrafia e dal profilo topografico*
Classe di duttilità CD	*Classe di duttilità della struttura – "A" duttilità alta, "B" duttilità bassa*
Fattore riduz. SLD	*Fattore di riduzione dello spettro elastico per lo stato limite di danno*
Periodo proprio T1	*Periodo proprio di vibrazione della struttura*
Coefficiente Lambda	*Coefficiente dipendente dal periodo proprio T1 e dal numero di piani della struttura*
Ordinata spettro Sd(T1)	*Valore delle ordinate dello spettro di progetto per lo stato limite ultimo, componente orizzontale (verticale Svd)*
Ordinata spettro Se(T1)	*Valore delle ordinate dello spettro elastico ridotta del fattore SLD per lo stato limite di danno, componente orizzontale (verticale Sve)*
Ordinata spettro S (Tb-Tc)	*Valore dell' ordinata dello spettro in uso nel tratto costante*
numero di modi considerati	*Numero di modi di vibrare della struttura considerati nell'analisi dinamica*

Per ciascun caso di carico sismico viene riportato l'insieme di dati sotto riportati (le masse sono espresse in unità di forza):
a) analisi sismica statica equivalente:
quota, posizione del centro di applicazione e azione orizzontale risultante, posizione del baricentro delle rigidezze, rapporto r/Ls (per strutture a nucleo), indici di regolarità e/r secondo EC8 4.2.3.2
b) azione sismica complessiva
analisi sismica dinamica con spettro di risposta:
quota, posizione del centro di massa e massa risultante, posizione del baricentro delle rigidezze, rapporto r/Ls (per strutture a nucleo) , indici di regolarità e/r secondo EC8 4.2.3.2
frequenza, periodo,accelerazione spettrale, massa eccitata nelle tre direzioni globali per tutti i modi
massa complessiva ed aliquota di massa complessiva eccitata.

Per ciascuna combinazione sismica definita SLD o SLO viene riportato il livello di deformazione etaT (dr) degli elementi strutturali verticali. Per semplicità di consultazione il livello è espresso anche in unità 1000*etaT/h da confrontare direttamente con i valori forniti nella norma (es. 5 per edifici con tamponamenti collegati rigidamente alla struttura, 10.0 per edifici con tamponamenti collegati elasticamente, 3 per edifici in muratura ordinaria, 4 per edifici in muratura armata).

Qualora si applichi il D.M. 96 (vedi NOTA sul capitolo "normativa di riferimento") l'analisi sismica dinamica può essere comprensiva di sollecitazione verticale contemporanea a quella orizzontale, nel qual caso è effettuata una sovrapposizione degli effetti in ragione della radice dei quadrati degli effetti stessi. Per ciascuna combinazione sismica - analisi effettuate con il D.M. 96 (vedi NOTA sul capitolo "normativa di riferimento") - viene riportato il livello di deformazione etaT, etaP e etaD degli

*elementi strutturali verticali. Per semplicità di consultazione il livello è espresso in unità 1000*etaT/h da confrontare direttamente con il valore 2 o 4 per la verifica.*

Per gli edifici sismicamente isolati si riportano di seguito le verifiche condotte sui dispositivi di isolamento. Le verifiche sono effettuate secondo l' allegato 10.A dell'Ordinanza 3274 e smi. In particolare la tabella, per ogni combinazione SLU (SLC per il DM 14-01-2008) sismica riporta il codice di verifica e i valori utilizzati per la verifica: spostamento dE, area ridotta e dimensione A2, azione verticale, deformazioni di taglio dell' elastomero e tensioni nell' acciaio.

Nodo	*Nodo di appoggio dell' isolatore*
Cmb	*Combinazione oggetto della verifica*
Verif.	*Codice di verifica ok – verifica positiva , NV – verifica negativa, ND – verifica non completata*
dE	*Spostamento relativo tra le due facce (amplificato del 20% per Ordinanza 3274 e smi) combinato con la regola del 30%*
Ang fi	*Angolo utilizzato per il calcolo dell' area ridotta Ar (per dispositivi circolari)*
V	*Azione verticale agente*
Ar	*Area ridotta efficace*
Dim A2	*Dimensione utile per il calcolo della deformazione per rotazione*
Sig s	*Tensione nell' inserto in acciaio*
Gam c(a,s,t)	*Deformazioni di taglio dell' elestomero*
Vcr	*Carico critico per instabilità*

Affinché la verifica sia positiva deve essere:

V > 0
Sig s < fyk
Gam t < 5
*Gam s < Gam * (caratteristica dell' elastomero)*
Gam s < 2
V < 0.5 Vcr

CDC	Tipo	Sigla Id	Note
2	Edk	CDC=Ed (dinamico SLU) alfa=0.0 (ecc. +)	
			categoria suolo: C
			fattore di sito S = 1.500
			ordinata spettro (tratto Tb-Tc) = 0.216 g
			angolo di ingresso:0.0
			eccentricità aggiuntiva: positiva
			periodo proprio T1: 0.077 sec.
			fattore di struttura q: 2.000
			fattore per spost. mu d: 6.000
			classe di duttilità CD: B
			numero di modi considerati: 9
			combinaz. modale: CQC

Quota	M Sismica x g	Pos. GX	Pos. GY	E agg. X-X	E agg. Y-Y	Pos. KX	Pos. KY	rapp. r/Ls	rapp. ex/rx	rapp. ey/ry
m	daN	m	m	m	m	m	m			
3.93	6348.46	3.60	13.36	0.0	-1.33	3.60	13.36	0.509	0.0	0.0
3.43	8.471e+04	3.60	13.42	0.0	-1.33	3.60	13.58	0.441	3.3597e-05	0.019
2.98	9675.00	3.60	13.45	0.0	-1.23	3.60	13.58	0.487	0.0	0.016
2.53	9137.50	3.60	13.45	0.0	-1.23	3.60	13.58	0.487	0.0	0.016
2.13	8600.00	3.60	13.45	0.0	-1.23	3.60	13.58	0.487	0.0	0.016
1.73	8600.00	3.60	13.45	0.0	-1.23	3.60	13.58	0.487	0.0	0.016

Quota	M Sismica x g	Pos. GX	Pos. GY	E agg. X-X	E agg. Y-Y	Pos. KX	Pos. KY	rapp. r/Ls	rapp. ex/rx	rapp. ey/ry
1.33	8600.00	3.60	13.45	0.0	-1.23	3.60	13.58	0.487	0.0	0.016
0.93	9298.75	3.60	13.45	0.0	-1.23	3.60	13.58	0.487	0.0	0.016
0.47	9997.50	3.60	13.45	0.0	-1.23	3.60	13.58	0.487	0.0	0.016
Risulta	1.550e+05									

Modo	Frequenza	Periodo	Acc. Spettrale	M efficace X x g	%	M efficace Y x g	%	M efficace Z x g	%	Energia	Energia x v
	Hz	sec	g	daN		daN		daN			
1	8.167	0.122	0.207	4.282e+04	27.6	6.43e-06	0.0	3.36e-05	0.0	0.0	0.0
2	9.085	0.110	0.202	2.586e+04	16.7	8.88e-03	5.73e-06	5.67e-03	3.66e-06	0.0	0.0
3	10.466	0.096	0.197	1.12e-03	0.0	69.72	4.50e-02	4160.89	2.7	0.0	0.0
4	11.188	0.089	0.195	1.262e+04	8.1	0.01	6.83e-06	5.22e-04	0.0	0.0	0.0
5	11.982	0.083	0.193	0.02	1.32e-05	20.83	1.34e-02	4.936e+04	31.9	0.0	0.0
6	12.999	0.077	0.191	4.706e+04	30.4	0.05	2.96e-05	0.04	2.62e-05	0.0	0.0
7	18.442	0.054	0.183	0.04	2.71e-05	9.422e+04	60.8	0.05	3.35e-05	0.0	0.0
8	22.187	0.045	0.179	271.27	0.2	0.12	8.04e-05	0.11	7.15e-05	0.0	0.0
9	23.728	0.042	0.178	0.02	1.27e-05	7018.62	4.5	2.042e+04	13.2	0.0	0.0
Risulta				1.286e+05		1.013e+05		7.395e+04			
In percentuale				83.00		65.39		47.72			

CDC	Tipo	Sigla Id	Note
3	Edk	CDC=Ed (dinamico SLU) alfa=0.0 (ecc. -)	
			categoria suolo: C
			fattore di sito S = 1.500
			ordinata spettro (tratto Tb-Tc) = 0.216 g
			angolo di ingresso:0.0
			eccentricità aggiuntiva: negativa
			periodo proprio T1: 0.118 sec.
			fattore di struttura q: 2.000
			fattore per spost. mu d: 4.797
			classe di duttilità CD: B
			numero di modi considerati: 9
			combinaz. modale: CQC

Quota	M Sismica x g	Pos. GX	Pos. GY	E agg. X-X	E agg. Y-Y	Pos. KX	Pos. KY	rapp. r/Ls	rapp. ex/rx	rapp. ey/ry
m	daN	m	m	m	m	m	m			
3.93	6348.46	3.60	13.36	0.0	1.33	3.60	13.36	0.509	0.0	0.0
3.43	8.471e+04	3.60	13.42	0.0	1.33	3.60	13.58	0.441	3.3597e-05	0.019
2.98	9675.00	3.60	13.45	0.0	1.23	3.60	13.58	0.487	0.0	0.016
2.53	9137.50	3.60	13.45	0.0	1.23	3.60	13.58	0.487	0.0	0.016
2.13	8600.00	3.60	13.45	0.0	1.23	3.60	13.58	0.487	0.0	0.016
1.73	8600.00	3.60	13.45	0.0	1.23	3.60	13.58	0.487	0.0	0.016
1.33	8600.00	3.60	13.45	0.0	1.23	3.60	13.58	0.487	0.0	0.016
0.93	9298.75	3.60	13.45	0.0	1.23	3.60	13.58	0.487	0.0	0.016
0.47	9997.50	3.60	13.45	0.0	1.23	3.60	13.58	0.487	0.0	0.016
Risulta	1.550e+05									

Modo	Frequenza	Periodo	Acc. Spettrale	M efficace X x g	%	M efficace Y x g	%	M efficace Z x g	%	Energia	Energia x v
	Hz	sec	g	daN		daN		daN			
1	8.494	0.118	0.205	6.909e+04	44.6	8.35e-03	5.39e-06	4.75e-03	3.06e-06	0.0	0.0
2	8.621	0.116	0.204	51.92	3.35e-02	3.20e-03	2.06e-06	1.38e-03	0.0	0.0	0.0
3	10.469	0.096	0.197	6.95e-04	0.0	70.05	4.52e-02	4101.88	2.6	0.0	0.0
4	11.608	0.086	0.194	1170.33	0.8	0.02	1.39e-05	0.04	2.59e-05	0.0	0.0
5	11.979	0.083	0.193	1.49e-03	0.0	20.19	1.30e-02	4.942e+04	31.9	0.0	0.0
6	12.725	0.079	0.191	5.816e+04	37.5	1.79e-03	1.16e-06	6.47e-03	4.18e-06	0.0	0.0
7	18.441	0.054	0.183	0.03	2.10e-05	9.426e+04	60.8	1.81e-03	1.17e-06	0.0	0.0
8	22.041	0.045	0.180	240.57	0.2	1.93	1.25e-03	4.80	3.09e-03	0.0	0.0
9	23.973	0.042	0.178	8.88	5.73e-03	1887.52	1.2	5785.17	3.7	0.0	0.0
Risulta				1.287e+05		9.624e+04		5.931e+04			
In percentuale				83.06		62.10		38.27			

CDC	Tipo	Sigla Id	Note
4	Edk	CDC=Ed (dinamico SLU) alfa=90.00 (ecc. +)	
			categoria suolo: C
			fattore di sito S = 1.500
			ordinata spettro (tratto Tb-Tc) = 0.216 g
			angolo di ingresso:90.00
			eccentricità aggiuntiva: positiva
			periodo proprio T1: 0.054 sec.
			fattore di struttura q: 2.000
			fattore per spost. mu d: 6.000
			classe di duttilità CD: B
			numero di modi considerati: 9
			combinaz. modale: CQC

Quota	M Sismica x g	Pos. GX	Pos. GY	E agg. X-X	E agg. Y-Y	Pos. KX	Pos. KY	rapp. r/Ls	rapp. ex/rx	rapp. ey/ry
m	daN	m	m	m	m	m	m			
3.93	6348.46	3.60	13.36	0.36	0.0	3.60	13.36	0.509	0.0	0.0
3.43	8.471e+04	3.60	13.42	0.36	0.0	3.60	13.58	0.441	3.3597e-05	0.019
2.98	9675.00	3.60	13.45	0.25	0.0	3.60	13.58	0.487	0.0	0.016
2.53	9137.50	3.60	13.45	0.25	0.0	3.60	13.58	0.487	0.0	0.016
2.13	8600.00	3.60	13.45	0.25	0.0	3.60	13.58	0.487	0.0	0.016
1.73	8600.00	3.60	13.45	0.25	0.0	3.60	13.58	0.487	0.0	0.016
1.33	8600.00	3.60	13.45	0.25	0.0	3.60	13.58	0.487	0.0	0.016
0.93	9298.75	3.60	13.45	0.25	0.0	3.60	13.58	0.487	0.0	0.016
0.47	9997.50	3.60	13.45	0.25	0.0	3.60	13.58	0.487	0.0	0.016
Risulta	1.550e+05									

Modo	Frequenza	Periodo	Acc. Spettrale	M efficace X x g	%	M efficace Y x g	%	M efficace Z x g	%	Energia	Energia x v
	Hz	sec	g	daN		daN		daN			
1	8.388	0.119	0.206	3.607e+04	23.3	20.83	1.34e-02	5.90e-03	3.80e-06	0.0	0.0
2	8.826	0.113	0.203	3.103e+04	20.0	43.14	2.78e-02	0.02	9.69e-06	0.0	0.0
3	10.467	0.096	0.197	0.13	8.30e-05	71.76	4.63e-02	4130.87	2.7	0.0	0.0
4	11.452	0.087	0.194	4299.75	2.8	299.34	0.2	2.21	1.43e-03	0.0	0.0
5	11.981	0.083	0.193	3.65	2.35e-03	19.89	1.28e-02	4.939e+04	31.9	0.0	0.0
6	12.632	0.079	0.191	5.699e+04	36.8	12.76	8.24e-03	2.23	1.44e-03	0.0	0.0
7	18.437	0.054	0.183	0.02	1.45e-05	9.419e+04	60.8	4.19e-03	2.70e-06	0.0	0.0

Modo	Frequenza	Periodo	Acc. Spettrale	M efficace X x g	%	M efficace Y x g	%	M efficace Z x g	%	Energia	Energia x v
8	22.085	0.045	0.180	236.46	0.2	0.37	2.38e-04	0.06	4.04e-05	0.0	0.0
9	23.726	0.042	0.178	0.75	4.81e-04	7124.22	4.6	2.026e+04	13.1	0.0	0.0
Risulta				1.286e+05		1.018e+05		7.378e+04			
In percentuale				83.01		65.68		47.61			

CDC	Tipo	Sigla Id	Note
5	Edk	CDC=Ed (dinamico SLU) alfa=90.00 (ecc. -)	
			categoria suolo: C
			fattore di sito S = 1.500
			ordinata spettro (tratto Tb-Tc) = 0.216 g
			angolo di ingresso:90.00
			eccentricità aggiuntiva: negativa
			periodo proprio T1: 0.054 sec.
			fattore di struttura q: 2.000
			fattore per spost. mu d: 6.000
			classe di duttilità CD: B
			numero di modi considerati: 9
			combinaz. modale: CQC

Quota	M Sismica x g	Pos. GX	Pos. GY	E agg. X-X	E agg. Y-Y	Pos. KX	Pos. KY	rapp. r/Ls	rapp. ex/rx	rapp. ey/ry
m	daN	m	m	m	m	m	m			
3.93	6348.46	3.60	13.36	-0.36	0.0	3.60	13.36	0.509	0.0	0.0
3.43	8.471e+04	3.60	13.42	-0.36	0.0	3.60	13.58	0.441	3.3597e-05	0.019
2.98	9675.00	3.60	13.45	-0.25	0.0	3.60	13.58	0.487	0.0	0.016
2.53	9137.50	3.60	13.45	-0.25	0.0	3.60	13.58	0.487	0.0	0.016
2.13	8600.00	3.60	13.45	-0.25	0.0	3.60	13.58	0.487	0.0	0.016
1.73	8600.00	3.60	13.45	-0.25	0.0	3.60	13.58	0.487	0.0	0.016
1.33	8600.00	3.60	13.45	-0.25	0.0	3.60	13.58	0.487	0.0	0.016
0.93	9298.75	3.60	13.45	-0.25	0.0	3.60	13.58	0.487	0.0	0.016
0.47	9997.50	3.60	13.45	-0.25	0.0	3.60	13.58	0.487	0.0	0.016
Risulta	1.550e+05									

Modo	Frequenza	Periodo	Acc. Spettrale	M efficace X x g	%	M efficace Y x g	%	M efficace Z x g	%	Energia	Energia x v
	Hz	sec	g	daN		daN		daN			
1	8.388	0.119	0.206	3.607e+04	23.3	20.71	1.34e-02	2.90e-03	1.87e-06	0.0	0.0
2	8.826	0.113	0.203	3.104e+04	20.0	45.89	2.96e-02	1.00e-03	0.0	0.0	0.0
3	10.467	0.096	0.197	0.17	1.12e-04	71.72	4.63e-02	4130.95	2.7	0.0	0.0
4	11.452	0.087	0.194	4297.33	2.8	308.27	0.2	1.91	1.23e-03	0.0	0.0
5	11.981	0.083	0.193	2.26	1.46e-03	19.98	1.29e-02	4.939e+04	31.9	0.0	0.0
6	12.632	0.079	0.191	5.700e+04	36.8	14.82	9.56e-03	1.19	7.68e-04	0.0	0.0
7	18.439	0.054	0.183	0.05	3.42e-05	9.417e+04	60.8	7.28e-03	4.70e-06	0.0	0.0
8	22.085	0.045	0.180	236.85	0.2	3.38e-04	0.0	0.67	4.34e-04	0.0	0.0
9	23.727	0.042	0.178	0.13	8.17e-05	7153.02	4.6	2.030e+04	13.1	0.0	0.0
Risulta				1.286e+05		1.018e+05		7.382e+04			
In percentuale				83.01		65.70		47.64			

CDC	Tipo	Sigla Id	Note
6	Edk	CDC=Ed (dinamico SLD) alfa=0.0 (ecc. +)	
			categoria suolo: C
			fattore di sito S = 1.500
			ordinata spettro (tratto Tb-Tc) = 0.210 g
			angolo di ingresso:0.0
			eccentricità aggiuntiva: positiva
			periodo proprio T1: 0.077 sec.
			numero di modi considerati: 9
			combinaz. modale: CQC

Quota	M Sismica x g	Pos. GX	Pos. GY	E agg. X-X	E agg. Y-Y	Pos. KX	Pos. KY	rapp. r/Ls	rapp. ex/rx	rapp. ey/ry
m	daN	m	m	m	m	m	m			
3.93	6348.46	3.60	13.36	0.0	-1.33	3.60	13.36	0.509	0.0	0.0
3.43	8.471e+04	3.60	13.42	0.0	-1.33	3.60	13.58	0.441	3.3597e-05	0.019
2.98	9675.00	3.60	13.45	0.0	-1.23	3.60	13.58	0.487	0.0	0.016
2.53	9137.50	3.60	13.45	0.0	-1.23	3.60	13.58	0.487	0.0	0.016
2.13	8600.00	3.60	13.45	0.0	-1.23	3.60	13.58	0.487	0.0	0.016
1.73	8600.00	3.60	13.45	0.0	-1.23	3.60	13.58	0.487	0.0	0.016
1.33	8600.00	3.60	13.45	0.0	-1.23	3.60	13.58	0.487	0.0	0.016
0.93	9298.75	3.60	13.45	0.0	-1.23	3.60	13.58	0.487	0.0	0.016
0.47	9997.50	3.60	13.45	0.0	-1.23	3.60	13.58	0.487	0.0	0.016
Risulta	1.550e+05									

Modo	Frequenza	Periodo	Acc. Spettrale	M efficace X x g	%	M efficace Y x g	%	M efficace Z x g	%	Energia	Energia x v
	Hz	sec	g	daN		daN		daN			
1	8.167	0.122	0.198	4.282e+04	27.6	6.43e-06	0.0	3.36e-05	0.0	0.0	0.0
2	9.085	0.110	0.186	2.586e+04	16.7	8.88e-03	5.73e-06	5.67e-03	3.66e-06	0.0	0.0
3	10.466	0.096	0.172	1.12e-03	0.0	69.72	4.50e-02	4160.89	2.7	0.0	0.0
4	11.188	0.089	0.166	1.262e+04	8.1	0.01	6.83e-06	5.22e-04	0.0	0.0	0.0
5	11.982	0.083	0.161	0.02	1.32e-05	20.83	1.34e-02	4.936e+04	31.9	0.0	0.0
6	12.999	0.077	0.154	4.706e+04	30.4	0.05	2.96e-05	0.04	2.62e-05	0.0	0.0
7	18.442	0.054	0.133	0.04	2.71e-05	9.422e+04	60.8	0.05	3.35e-05	0.0	0.0
8	22.187	0.045	0.124	271.27	0.2	0.12	8.04e-05	0.11	7.15e-05	0.0	0.0
9	23.728	0.042	0.121	0.02	1.27e-05	7018.62	4.5	2.042e+04	13.2	0.0	0.0
Risulta				1.286e+05		1.013e+05		7.395e+04			
In percentuale				83.00		65.39		47.72			

CDC	Tipo	Sigla Id	Note
7	Edk	CDC=Ed (dinamico SLD) alfa=0.0 (ecc. -)	
			categoria suolo: C
			fattore di sito S = 1.500
			ordinata spettro (tratto Tb-Tc) = 0.210 g
			angolo di ingresso:0.0
			eccentricità aggiuntiva: negativa
			periodo proprio T1: 0.118 sec.
			numero di modi considerati: 9
			combinaz. modale: CQC

Quota	M Sismica x g	Pos. GX	Pos. GY	E agg. X-X	E agg. Y-Y	Pos. KX	Pos. KY	rapp. r/Ls	rapp. ex/rx	rapp. ey/ry
m	daN	m	m	m	m	m	m			
3.93	6348.46	3.60	13.36	0.0	1.33	3.60	13.36	0.509	0.0	0.0
3.43	8.471e+04	3.60	13.42	0.0	1.33	3.60	13.58	0.441	3.3597e-05	0.019
2.98	9675.00	3.60	13.45	0.0	1.23	3.60	13.58	0.487	0.0	0.016
2.53	9137.50	3.60	13.45	0.0	1.23	3.60	13.58	0.487	0.0	0.016
2.13	8600.00	3.60	13.45	0.0	1.23	3.60	13.58	0.487	0.0	0.016
1.73	8600.00	3.60	13.45	0.0	1.23	3.60	13.58	0.487	0.0	0.016
1.33	8600.00	3.60	13.45	0.0	1.23	3.60	13.58	0.487	0.0	0.016
0.93	9298.75	3.60	13.45	0.0	1.23	3.60	13.58	0.487	0.0	0.016
0.47	9997.50	3.60	13.45	0.0	1.23	3.60	13.58	0.487	0.0	0.016
Risulta	1.550e+05									

Modo	Frequenza	Periodo	Acc. Spettrale	M efficace X x g	%	M efficace Y x g	%	M efficace Z x g	%	Energia	Energia x v
	Hz	sec	g	daN		daN		daN			
1	8.494	0.118	0.193	6.909e+04	44.6	8.35e-03	5.39e-06	4.75e-03	3.06e-06	0.0	0.0
2	8.621	0.116	0.192	51.92	3.35e-02	3.20e-03	2.06e-06	1.38e-03	0.0	0.0	0.0
3	10.469	0.096	0.172	6.95e-04	0.0	70.05	4.52e-02	4101.88	2.6	0.0	0.0
4	11.608	0.086	0.163	1170.33	0.8	0.02	1.39e-05	0.04	2.59e-05	0.0	0.0
5	11.979	0.083	0.161	1.49e-03	0.0	20.19	1.30e-02	4.942e+04	31.9	0.0	0.0
6	12.725	0.079	0.156	5.816e+04	37.5	1.79e-03	1.16e-06	6.47e-03	4.18e-06	0.0	0.0
7	18.441	0.054	0.133	0.03	2.10e-05	9.426e+04	60.8	1.81e-03	1.17e-06	0.0	0.0
8	22.041	0.045	0.124	240.57	0.2	1.93	1.25e-03	4.80	3.09e-03	0.0	0.0
9	23.973	0.042	0.121	8.88	5.73e-03	1887.52	1.2	5785.17	3.7	0.0	0.0
Risulta				1.287e+05		9.624e+04		5.931e+04			
In percentuale				83.06		62.10		38.27			

CDC	Tipo	Sigla Id	Note
8	Edk	CDC=Ed (dinamico SLD) alfa=90.00 (ecc. +)	
			categoria suolo: C
			fattore di sito S = 1.500
			ordinata spettro (tratto Tb-Tc) = 0.210 g
			angolo di ingresso:90.00
			eccentricità aggiuntiva: positiva
			periodo proprio T1: 0.054 sec.
			numero di modi considerati: 9
			combinaz. modale: CQC

Quota	M Sismica x g	Pos. GX	Pos. GY	E agg. X-X	E agg. Y-Y	Pos. KX	Pos. KY	rapp. r/Ls	rapp. ex/rx	rapp. ey/ry
m	daN	m	m	m	m	m	m			
3.93	6348.46	3.60	13.36	0.36	0.0	3.60	13.36	0.509	0.0	0.0
3.43	8.471e+04	3.60	13.42	0.36	0.0	3.60	13.58	0.441	3.3597e-05	0.019
2.98	9675.00	3.60	13.45	0.25	0.0	3.60	13.58	0.487	0.0	0.016
2.53	9137.50	3.60	13.45	0.25	0.0	3.60	13.58	0.487	0.0	0.016
2.13	8600.00	3.60	13.45	0.25	0.0	3.60	13.58	0.487	0.0	0.016
1.73	8600.00	3.60	13.45	0.25	0.0	3.60	13.58	0.487	0.0	0.016
1.33	8600.00	3.60	13.45	0.25	0.0	3.60	13.58	0.487	0.0	0.016
0.93	9298.75	3.60	13.45	0.25	0.0	3.60	13.58	0.487	0.0	0.016
0.47	9997.50	3.60	13.45	0.25	0.0	3.60	13.58	0.487	0.0	0.016

Quota	M Sismica x g	Pos. GX	Pos. GY	E agg. X-X	E agg. Y-Y	Pos. KX	Pos. KY	rapp. r/Ls	rapp. ex/rx	rapp. ey/ry
Risulta	1.550e+05									

Modo	Frequenza	Periodo	Acc. Spettrale	M efficace X x g	%	M efficace Y x g	%	M efficace Z x g	%	Energia	Energia x v
	Hz	sec	g	daN		daN		daN			
1	8.388	0.119	0.195	3.607e+04	23.3	20.83	1.34e-02	5.90e-03	3.80e-06	0.0	0.0
2	8.826	0.113	0.189	3.103e+04	20.0	43.14	2.78e-02	0.02	9.69e-06	0.0	0.0
3	10.467	0.096	0.172	0.13	8.30e-05	71.76	4.63e-02	4130.87	2.7	0.0	0.0
4	11.452	0.087	0.164	4299.75	2.8	299.34	0.2	2.21	1.43e-03	0.0	0.0
5	11.981	0.083	0.161	3.65	2.35e-03	19.89	1.28e-02	4.939e+04	31.9	0.0	0.0
6	12.632	0.079	0.156	5.699e+04	36.8	12.76	8.24e-03	2.23	1.44e-03	0.0	0.0
7	18.437	0.054	0.133	0.02	1.45e-05	9.419e+04	60.8	4.19e-03	2.70e-06	0.0	0.0
8	22.085	0.045	0.124	236.46	0.2	0.37	2.38e-04	0.06	4.04e-05	0.0	0.0
9	23.726	0.042	0.121	0.75	4.81e-04	7124.22	4.6	2.026e+04	13.1	0.0	0.0
Risulta				1.286e+05		1.018e+05		7.378e+04			
In percentuale				83.01		65.68		47.61			

CDC	Tipo	Sigla Id	Note
9	Edk	CDC=Ed (dinamico SLD) alfa=90.00 (ecc. -)	
			categoria suolo: C
			fattore di sito S = 1.500
			ordinata spettro (tratto Tb-Tc) = 0.210 g
			angolo di ingresso:90.00
			eccentricità aggiuntiva: negativa
			periodo proprio T1: 0.054 sec.
			numero di modi considerati: 9
			combinaz. modale: CQC

Quota	M Sismica x g	Pos. GX	Pos. GY	E agg. X-X	E agg. Y-Y	Pos. KX	Pos. KY	rapp. r/Ls	rapp. ex/rx	rapp. ey/ry
m	daN	m	m	m	m	m	m			
3.93	6348.46	3.60	13.36	-0.36	0.0	3.60	13.36	0.509	0.0	0.0
3.43	8.471e+04	3.60	13.42	-0.36	0.0	3.60	13.58	0.441	3.3597e-05	0.019
2.98	9675.00	3.60	13.45	-0.25	0.0	3.60	13.58	0.487	0.0	0.016
2.53	9137.50	3.60	13.45	-0.25	0.0	3.60	13.58	0.487	0.0	0.016
2.13	8600.00	3.60	13.45	-0.25	0.0	3.60	13.58	0.487	0.0	0.016
1.73	8600.00	3.60	13.45	-0.25	0.0	3.60	13.58	0.487	0.0	0.016
1.33	8600.00	3.60	13.45	-0.25	0.0	3.60	13.58	0.487	0.0	0.016
0.93	9298.75	3.60	13.45	-0.25	0.0	3.60	13.58	0.487	0.0	0.016
0.47	9997.50	3.60	13.45	-0.25	0.0	3.60	13.58	0.487	0.0	0.016
Risulta	1.550e+05									

Modo	Frequenza	Periodo	Acc. Spettrale	M efficace X x g	%	M efficace Y x g	%	M efficace Z x g	%	Energia	Energia x v
	Hz	sec	g	daN		daN		daN			
1	8.388	0.119	0.195	3.607e+04	23.3	20.71	1.34e-02	2.90e-03	1.87e-06	0.0	0.0
2	8.826	0.113	0.189	3.104e+04	20.0	45.89	2.96e-02	1.00e-03	0.0	0.0	0.0
3	10.467	0.096	0.172	0.17	1.12e-04	71.72	4.63e-02	4130.95	2.7	0.0	0.0
4	11.452	0.087	0.164	4297.33	2.8	308.27	0.2	1.91	1.23e-03	0.0	0.0
5	11.981	0.083	0.161	2.26	1.46e-03	19.98	1.29e-02	4.939e+04	31.9	0.0	0.0
6	12.632	0.079	0.156	5.700e+04	36.8	14.82	9.56e-03	1.19	7.68e-04	0.0	0.0

Modo	Frequenza	Periodo	Acc. Spettrale	M efficace X x g	%	M efficace Y x g	%	M efficace Z x g	%	Energia	Energia x v
7	18.439	0.054	0.133	0.05	3.42e-05	9.417e+04	60.8	7.28e-03	4.70e-06	0.0	0.0
8	22.085	0.045	0.124	236.85	0.2	3.38e-04	0.0	0.67	4.34e-04	0.0	0.0
9	23.727	0.042	0.121	0.13	8.17e-05	7153.02	4.6	2.030e+04	13.1	0.0	0.0
Risulta				1.286e+05		1.018e+05		7.382e+04			
In percentuale				83.01		65.70		47.64			

Cmb	Pilas.1000	etaT/h	etaT	inter. h	Pilas.1000	etaT/h	etaT	inter. h	Pilas.1000	etaT/h	etaT	inter. h
			cm	cm			cm	cm			cm	cm
49	1	0.09	0.03	343.0	2	0.09	0.03	343.0	3	0.12	0.04	343.0
	4	0.12	0.04	343.0	5	0.08	0.03	343.0	6	0.08	0.03	343.0
	7	0.07	0.03	343.0	8	0.09	0.03	343.0				
50	1	0.09	0.03	343.0	2	0.09	0.03	343.0	3	0.12	0.04	343.0
	4	0.12	0.04	343.0	5	0.08	0.03	343.0	6	0.08	0.03	343.0
	7	0.08	0.03	343.0	8	0.09	0.03	343.0				
51	1	0.09	0.03	343.0	2	0.09	0.03	343.0	3	0.12	0.04	343.0
	4	0.12	0.04	343.0	5	0.09	0.03	343.0	6	0.08	0.03	343.0
	7	0.08	0.03	343.0	8	0.08	0.03	343.0				
52	1	0.09	0.03	343.0	2	0.09	0.03	343.0	3	0.12	0.04	343.0
	4	0.12	0.04	343.0	5	0.09	0.03	343.0	6	0.08	0.03	343.0
	7	0.07	0.03	343.0	8	0.08	0.03	343.0				
53	1	0.09	0.03	343.0	2	0.09	0.03	343.0	3	0.12	0.04	343.0
	4	0.12	0.04	343.0	5	0.08	0.03	343.0	6	0.08	0.03	343.0
	7	0.08	0.03	343.0	8	0.09	0.03	343.0				
54	1	0.09	0.03	343.0	2	0.09	0.03	343.0	3	0.12	0.04	343.0
	4	0.12	0.04	343.0	5	0.08	0.03	343.0	6	0.07	0.03	343.0
	7	0.08	0.03	343.0	8	0.09	0.03	343.0				
55	1	0.09	0.03	343.0	2	0.09	0.03	343.0	3	0.12	0.04	343.0
	4	0.12	0.04	343.0	5	0.09	0.03	343.0	6	0.07	0.03	343.0
	7	0.08	0.03	343.0	8	0.08	0.03	343.0				
56	1	0.09	0.03	343.0	2	0.09	0.03	343.0	3	0.12	0.04	343.0
	4	0.12	0.04	343.0	5	0.09	0.03	343.0	6	0.08	0.03	343.0
	7	0.08	0.03	343.0	8	0.08	0.03	343.0				
57	1	0.10	0.03	343.0	2	0.10	0.03	343.0	3	0.07	0.02	343.0
	4	0.07	0.02	343.0	5	0.10	0.03	343.0	6	0.12	0.04	343.0
	7	0.12	0.04	343.0	8	0.10	0.03	343.0				
58	1	0.10	0.03	343.0	2	0.09	0.03	343.0	3	0.07	0.02	343.0
	4	0.06	0.02	343.0	5	0.10	0.03	343.0	6	0.13	0.04	343.0
	7	0.13	0.04	343.0	8	0.10	0.04	343.0				
59	1	0.09	0.03	343.0	2	0.10	0.03	343.0	3	0.07	0.02	343.0
	4	0.06	0.02	343.0	5	0.10	0.04	343.0	6	0.13	0.04	343.0
	7	0.13	0.04	343.0	8	0.10	0.03	343.0				
60	1	0.10	0.03	343.0	2	0.10	0.03	343.0	3	0.07	0.02	343.0
	4	0.07	0.02	343.0	5	0.10	0.03	343.0	6	0.12	0.04	343.0
	7	0.12	0.04	343.0	8	0.10	0.03	343.0				
61	1	0.10	0.03	343.0	2	0.09	0.03	343.0	3	0.06	0.02	343.0
	4	0.07	0.02	343.0	5	0.10	0.03	343.0	6	0.13	0.04	343.0
	7	0.13	0.04	343.0	8	0.10	0.04	343.0				
62	1	0.10	0.03	343.0	2	0.10	0.03	343.0	3	0.07	0.02	343.0
	4	0.07	0.02	343.0	5	0.10	0.03	343.0	6	0.12	0.04	343.0
	7	0.12	0.04	343.0	8	0.10	0.03	343.0				
63	1	0.10	0.03	343.0	2	0.10	0.03	343.0	3	0.07	0.02	343.0
	4	0.07	0.02	343.0	5	0.10	0.03	343.0	6	0.12	0.04	343.0
	7	0.12	0.04	343.0	8	0.10	0.03	343.0				
64	1	0.09	0.03	343.0	2	0.10	0.03	343.0	3	0.06	0.02	343.0

	4	0.07	0.02	343.0	5	0.10	0.03	343.0	6	0.13	0.04	343.0
	7	0.13	0.04	343.0	8	0.10	0.03	343.0				
65	1	0.03	0.01	343.0	2	0.03	0.01	343.0	3	0.04	0.01	343.0
	4	0.04	0.01	343.0	5	0.028.47e-03		343.0	6	0.038.86e-03		343.0
	7	0.026.42e-03		343.0	8	0.038.85e-03		343.0				
66	1	0.03	0.01	343.0	2	0.028.18e-03		343.0	3	0.03	0.01	343.0
	4	0.03	0.01	343.0	5	0.038.81e-03		343.0	6	0.039.29e-03		343.0
	7	0.03	0.01	343.0	8	0.03	0.01	343.0				
67	1	0.03	0.01	343.0	2	0.039.36e-03		343.0	3	0.03	0.01	343.0
	4	0.03	0.01	343.0	5	0.039.55e-03		343.0	6	0.039.84e-03		343.0
	7	0.03	0.01	343.0	8	0.039.18e-03		343.0				
68	1	0.038.88e-03		343.0	2	0.03	0.01	343.0	3	0.05	0.02	343.0
	4	0.04	0.01	343.0	5	0.03	0.01	343.0	6	0.027.80e-03		343.0
	7	0.025.59e-03		343.0	8	0.028.15e-03		343.0				
69	1	0.04	0.01	343.0	2	0.03	0.01	343.0	3	0.038.66e-03		343.0
	4	0.03	0.01	343.0	5	0.039.32e-03		343.0	6	0.03	0.01	343.0
	7	0.04	0.01	343.0	8	0.03	0.01	343.0				
70	1	0.03	0.01	343.0	2	0.039.64e-03		343.0	3	0.027.76e-03		343.0
	4	0.025.42e-03		343.0	5	0.03	0.01	343.0	6	0.04	0.01	343.0
	7	0.04	0.02	343.0	8	0.03	0.01	343.0				
71	1	0.039.68e-03		343.0	2	0.03	0.01	343.0	3	0.026.80e-03		343.0
	4	0.014.76e-03		343.0	5	0.03	0.01	343.0	6	0.05	0.02	343.0
	7	0.04	0.01	343.0	8	0.03	0.01	343.0				
72	1	0.03	0.01	343.0	2	0.03	0.01	343.0	3	0.039.17e-03		343.0
	4	0.03	0.01	343.0	5	0.03	0.01	343.0	6	0.03	0.01	343.0
	7	0.03	0.01	343.0	8	0.03	0.01	343.0				
73	1	0.039.37e-03		343.0	2	0.03	0.01	343.0	3	0.03	0.01	343.0
	4	0.03	0.01	343.0	5	0.039.21e-03		343.0	6	0.03	0.01	343.0
	7	0.039.96e-03		343.0	8	0.039.59e-03		343.0				
74	1	0.03	0.01	343.0	2	0.039.03e-03		343.0	3	0.04	0.01	343.0
	4	0.05	0.02	343.0	5	0.028.17e-03		343.0	6	0.025.61e-03		343.0
	7	0.027.82e-03		343.0	8	0.03	0.01	343.0				
75	1	0.03	0.01	343.0	2	0.03	0.01	343.0	3	0.04	0.01	343.0
	4	0.04	0.01	343.0	5	0.038.80e-03		343.0	6	0.026.30e-03		343.0
	7	0.038.81e-03		343.0	8	0.028.44e-03		343.0				
76	1	0.028.15e-03		343.0	2	0.039.94e-03		343.0	3	0.03	0.01	343.0
	4	0.03	0.01	343.0	5	0.03	0.01	343.0	6	0.03	0.01	343.0
	7	0.039.26e-03		343.0	8	0.038.79e-03		343.0				
77	1	0.03	0.01	343.0	2	0.039.58e-03		343.0	3	0.014.71e-03		343.0
	4	0.026.78e-03		343.0	5	0.03	0.01	343.0	6	0.04	0.02	343.0
	7	0.05	0.02	343.0	8	0.03	0.01	343.0				
78	1	0.03	0.01	343.0	2	0.03	0.01	343.0	3	0.03	0.01	343.0
	4	0.039.17e-03		343.0	5	0.03	0.01	343.0	6	0.03	0.01	343.0
	7	0.03	0.01	343.0	8	0.03	0.01	343.0				
79	1	0.03	0.01	343.0	2	0.04	0.01	343.0	3	0.03	0.01	343.0
	4	0.038.70e-03		343.0	5	0.03	0.01	343.0	6	0.04	0.01	343.0
	7	0.03	0.01	343.0	8	0.039.28e-03		343.0				
80	1	0.039.61e-03		343.0	2	0.039.90e-03		343.0	3	0.025.43e-03		343.0
	4	0.027.74e-03		343.0	5	0.03	0.01	343.0	6	0.04	0.01	343.0
	7	0.04	0.01	343.0	8	0.03	0.01	343.0				

Cmb	**1000 etaT/h**
	0.13

15. RISULTATI OPERE DI FONDAZIONE

Il controllo dei risultati delle analisi condotte, per quanto concerne le opere di fondazione, è possibile in relazione alle tabelle sotto riportate.

La prima tabella è riferita alle fondazioni tipo palo e plinto su pali.
Per questo tipo di fondazione vengono riportate le sei componenti di sollecitazione (espresse nel riferimento globale della struttura) per ogni palo componente l'opera.
In particolare viene riportato:

Nodo	*numero del nodo a cui è applicato il plinto*
Tipo	*codice corrispondente al nome assegnato al tipo di plinto di fondazione:* *3) palo singolo (*PALO*)* *4) plinto su palo* *5) plinto su due pali (*PL.2P*)* *6) plinto su tre pali (*PL.3P*)* *7) plinto su quattro pali (*PL.4P*)* *8) plinto rettangolare su cinque pali (*PL.5P.R*)* *9) plinto pentagonale su cinque pali (*PL.5P*)* *10) plinto su sei pali (*PL.6P*)*
Palo	*numero del palo*
Comb.	*combinazione di carico in cui si verificano le sei componenti di sollecitazione.*
Quota	*quota assoluta della sezione del palo per cui si riportano le sei componenti di sollecitazione.*

L'azione Fz (corrispondente allo sforzo normale nel palo) è costante poiché il peso del palo stesso non è considerato nella modellazione.

La seconda tabella è riferita alle fondazioni tipo plinto su suolo elastico.
Per questo tipo di fondazione vengono riportate le pressioni nei quattro vertici dell'impronta sul terreno.
In particolare viene riportato:

Nodo		*numero del nodo a cui è applicato il plinto*
Tipo		*Codice identificativo del nome assegnato al plinto*
area		*area dell'impronta del plinto*
Wink O	*Wink V*	*coefficienti di Winkler (orizzontale e verticale) adottati*
Comb		*Combinazione di carico in cui si verificano i valori riportati*
Pt (P1 P2 P3 P4)		*valori di pressione nei vertici*

La terza tabella è riferita alle fondazioni tipo platea su suolo elastico.
Per questo tipo di fondazione vengono riportate le pressioni in ogni vertice (nodo) degli elementi costituenti la platea.

La quarta tabella è riferita alle fondazioni tipo trave su suolo elastico.
Per questo tipo di fondazione vengono riportate le pressioni alle estremità dell'elemento e la massima (in valore assoluto) pressione lungo lo sviluppo dell'elemento.
Vengono inoltre riportati, con funzione statistica, i valori massimo e minimo delle pressioni che compaiono nella tabella.

Con riferimento al **Documento di Affidabilità** "*Test di validazione del software di calcolo PRO_SAP e dei moduli aggiuntivi PRO_SAP Modulo Geotecnico, PRO_CAD nodi acciaio e PRO_MST*" - versione Settembre 2014, disponibile per il download sul sito **www.2si.it**, si segnalano i seguenti esempi applicativi:

Test N°	Titolo
105	PLINTO SUPERFICIALE
106	PLINTO SUPERFICIALE
107	PLINTO SUPERFICIALE
108	PLINTO SUPERFICIALE
109	PLINTO SUPERFICIALE
110	PLINTO SUPERFICIALE
111	PLINTO SUPERFICIALE
112	PLINTO SUPERFICIALE
113	PLINTO SUPERFICIALE
114	PLINTO SUPERFICIALE
115	PLINTO SUPERFICIALE
116	PLINTO SUPERFICIALE
117	PLINTO SUPERFICIALE
118	PLINTO SUPERFICIALE
119	PLINTO SUPERFICIALE
120	PLINTO SUPERFICIALE
121	PLINTO SUPERFICIALE
122	PLINTO SUPERFICIALE
123	PLINTO SUPERFICIALE
124	FONDAZIONE NASTRIFORME
125	CALCOLO DEI K DI WINKLER

Nodo (G)	**Pt 1/12**	**Pt 2/13**	**Pt 3...**	**Pt 4...**							
	N/mm2	N/mm2	N/mm2	N/mm2	N/mm2	N/mm2	N/mm2	N/mm2	N/mm2	N/mm2	N/mm2
1	-0.03	-0.03	-0.02	-0.02	-0.03	-0.03	-0.02	-0.02	-0.02	-0.02	-0.02
	-0.02	-0.02	-0.02	-0.02	-0.02	-0.02	-0.02	-0.02	-0.02	-0.02	-0.02
	-0.02	-0.02	-0.02	-0.02	-0.02	-0.02	-0.02	-0.02	-0.02	-0.02	-0.02
	-0.03	-0.02	-0.03	-0.02	-0.03	-0.02	-0.03	-0.02	-0.03	-0.02	-0.03
	-0.02	-0.03	-0.02	-0.03	-0.02	-0.02	-0.02	-0.02	-0.02	-0.02	-0.02
	-0.02	-0.02	-0.02	-0.02	-0.02	-0.02	-0.02	-0.02	-0.02	-0.02	-0.02

	-0.02	-0.02	-0.02	-0.02	-0.02	-0.02	-0.02	-0.02	-0.02	-0.02	-0.02	
	-0.02	-0.02	-0.02									
4	-0.03	-0.03	-0.02	-0.02	-0.03	-0.03	-0.02	-0.02	-0.02	-0.02	-0.02	
	-0.02	-0.02	-0.02	-0.02	-0.02	-0.02	-0.02	-0.02	-0.02	-0.02	-0.02	
	-0.02	-0.02	-0.02	-0.02	-0.02	-0.02	-0.02	-0.02	-0.02	-0.02	-0.02	
	-0.02	-0.02	-0.02	-0.02	-0.02	-0.02	-0.02	-0.02	-0.02	-0.02	-0.02	
	-0.02	-0.02	-0.02	-0.02	-0.02	-0.02	-0.02	-0.02	-0.02	-0.02	-0.02	
	-0.02	-0.02	-0.02	-0.02	-0.02	-0.02	-0.02	-0.02	-0.02	-0.02	-0.02	
	-0.02	-0.02	-0.02	-0.02	-0.02	-0.02	-0.02	-0.02	-0.02	-0.02	-0.02	
	-0.02	-0.02	-0.02									
8	-0.03	-0.03	-0.02	-0.02	-0.03	-0.03	-0.02	-0.02	-0.02	-0.02	-0.02	
	-0.02	-0.02	-0.02	-0.02	-0.02	-0.02	-0.02	-0.02	-0.02	-0.02	-0.02	
	-0.02	-0.02	-0.02	-0.02	-0.02	-0.02	-0.02	-0.02	-0.02	-0.02	-0.02	
	-0.02	-0.02	-0.02	-0.02	-0.02	-0.02	-0.02	-0.02	-0.02	-0.02	-0.02	
	-0.02	-0.02	-0.02	-0.02	-0.02	-0.02	-0.02	-0.02	-0.02	-0.02	-0.02	
	-0.02	-0.02	-0.02	-0.02	-0.02	-0.02	-0.02	-0.02	-0.02	-0.02	-0.02	
	-0.02	-0.02	-0.02	-0.02	-0.02	-0.02	-0.02	-0.02	-0.02	-0.02	-0.02	
	-0.02	-0.02	-0.02									
11	-0.03	-0.03	-0.02	-0.02	-0.03	-0.03	-0.02	-0.02	-0.02	-0.02	-0.02	
	-0.02	-0.02	-0.02	-0.02	-0.02	-0.02	-0.02	-0.02	-0.02	-0.02	-0.02	
	-0.02	-0.02	-0.02	-0.02	-0.02	-0.02	-0.02	-0.02	-0.02	-0.02	-0.02	
	-0.02	-0.02	-0.02	-0.02	-0.02	-0.02	-0.02	-0.02	-0.02	-0.02	-0.02	
	-0.02	-0.02	-0.02	-0.02	-0.02	-0.02	-0.02	-0.02	-0.02	-0.02	-0.02	
	-0.02	-0.02	-0.02	-0.02	-0.02	-0.02	-0.02	-0.02	-0.02	-0.02	-0.02	
	-0.02	-0.02	-0.02	-0.02	-0.02	-0.02	-0.02	-0.02	-0.02	-0.02	-0.02	
	-0.02	-0.02	-0.02									
14	-0.03	-0.03	-0.02	-0.02	-0.03	-0.03	-0.02	-0.02	-0.02	-0.02	-0.02	
	-0.02	-0.02	-0.02	-0.02	-0.02	-0.02	-0.02	-0.02	-0.02	-0.02	-0.02	
	-0.02	-0.02	-0.02	-0.02	-0.02	-0.02	-0.02	-0.02	-0.02	-0.02	-0.02	
	-0.02	-0.02	-0.02	-0.02	-0.02	-0.02	-0.02	-0.02	-0.02	-0.02	-0.02	
	-0.02	-0.02	-0.02	-0.02	-0.02	-0.02	-0.02	-0.02	-0.02	-0.02	-0.02	
	-0.02	-0.02	-0.02	-0.02	-0.02	-0.02	-0.02	-0.02	-0.02	-0.02	-0.02	
	-0.02	-0.02	-0.02	-0.02	-0.02	-0.02	-0.02	-0.02	-0.02	-0.02	-0.02	
	-0.02	-0.02	-0.02									
17	-0.03	-0.03	-0.02	-0.02	-0.03	-0.03	-0.02	-0.02	-0.02	-0.02	-0.02	
	-0.02	-0.02	-0.02	-0.02	-0.02	-0.02	-0.02	-0.02	-0.02	-0.02	-0.02	
	-0.02	-0.02	-0.02	-0.02	-0.02	-0.02	-0.02	-0.02	-0.02	-0.02	-0.02	
	-0.02	-0.02	-0.02	-0.02	-0.02	-0.02	-0.02	-0.02	-0.02	-0.02	-0.02	
	-0.02	-0.02	-0.02	-0.02	-0.02	-0.02	-0.02	-0.02	-0.02	-0.02	-0.02	
	-0.02	-0.02	-0.02	-0.02	-0.02	-0.02	-0.02	-0.02	-0.02	-0.02	-0.02	
	-0.02	-0.02	-0.02	-0.02	-0.02	-0.02	-0.02	-0.02	-0.02	-0.02	-0.02	
	-0.02	-0.02	-0.02									
20	-0.03	-0.03	-0.02	-0.02	-0.03	-0.03	-0.02	-0.02	-0.02	-0.02	-0.02	
	-0.02	-0.02	-0.02	-0.02	-0.02	-0.02	-0.02	-0.02	-0.02	-0.02	-0.02	
	-0.02	-0.02	-0.02	-0.02	-0.02	-0.02	-0.02	-0.02	-0.02	-0.02	-0.02	
	-0.02	-0.02	-0.02	-0.02	-0.02	-0.02	-0.02	-0.02	-0.02	-0.02	-0.02	
	-0.02	-0.02	-0.02	-0.02	-0.02	-0.02	-0.02	-0.02	-0.02	-0.02	-0.02	
	-0.02	-0.02	-0.02	-0.02	-0.02	-0.02	-0.02	-0.02	-0.02	-0.02	-0.02	
	-0.02	-0.02	-0.02	-0.02	-0.02	-0.02	-0.02	-0.02	-0.02	-0.02	-0.02	
	-0.02	-0.02	-0.02									
23	-0.03	-0.03	-0.02	-0.02	-0.03	-0.03	-0.02	-0.02	-0.02	-0.02	-0.02	
	-0.02	-0.02	-0.02	-0.02	-0.02	-0.02	-0.02	-0.02	-0.02	-0.02	-0.02	
	-0.02	-0.02	-0.02	-0.02	-0.02	-0.02	-0.02	-0.02	-0.02	-0.02	-0.02	
	-0.02	-0.02	-0.02	-0.02	-0.02	-0.02	-0.02	-0.02	-0.02	-0.02	-0.02	
	-0.02	-0.02	-0.02	-0.02	-0.02	-0.02	-0.02	-0.02	-0.02	-0.02	-0.02	
	-0.02	-0.02	-0.02	-0.02	-0.02	-0.02	-0.02	-0.02	-0.02	-0.02	-0.02	
	-0.02	-0.02	-0.02	-0.02	-0.02	-0.02	-0.02	-0.02	-0.02	-0.02	-0.02	
	-0.02	-0.02	-0.02									

26	-0.03	-0.03	-0.02	-0.02	-0.03	-0.03	-0.02	-0.02	-0.02	-0.02	-0.02
	-0.02	-0.02	-0.02	-0.02	-0.02	-0.02	-0.02	-0.02	-0.02	-0.02	-0.02
	-0.02	-0.02	-0.02	-0.02	-0.02	-0.02	-0.02	-0.02	-0.02	-0.02	-0.02
	-0.02	-0.02	-0.02	-0.02	-0.02	-0.02	-0.02	-0.02	-0.02	-0.02	-0.02
	-0.02	-0.02	-0.02	-0.02	-0.02	-0.02	-0.02	-0.02	-0.02	-0.02	-0.02
	-0.02	-0.02	-0.02	-0.02	-0.02	-0.02	-0.02	-0.02	-0.02	-0.02	-0.02
	-0.02	-0.02	-0.02	-0.02	-0.02	-0.02	-0.02	-0.02	-0.02	-0.02	-0.02
	-0.02	-0.02	-0.02								
29	-0.03	-0.03	-0.02	-0.02	-0.03	-0.03	-0.02	-0.02	-0.02	-0.02	-0.02
	-0.02	-0.02	-0.02	-0.02	-0.02	-0.02	-0.02	-0.02	-0.02	-0.02	-0.02
	-0.02	-0.02	-0.02	-0.02	-0.02	-0.02	-0.02	-0.02	-0.02	-0.02	-0.02
	-0.02	-0.02	-0.02	-0.02	-0.02	-0.02	-0.02	-0.02	-0.02	-0.02	-0.02
	-0.02	-0.02	-0.02	-0.02	-0.02	-0.02	-0.02	-0.02	-0.02	-0.02	-0.02
	-0.02	-0.02	-0.02	-0.02	-0.02	-0.02	-0.02	-0.02	-0.02	-0.02	-0.02
	-0.02	-0.02	-0.02	-0.02	-0.02	-0.02	-0.02	-0.02	-0.02	-0.02	-0.02
	-0.02	-0.02	-0.02								
32	-0.03	-0.03	-0.02	-0.02	-0.03	-0.03	-0.02	-0.02	-0.02	-0.02	-0.02
	-0.02	-0.02	-0.02	-0.02	-0.02	-0.02	-0.02	-0.02	-0.02	-0.02	-0.02
	-0.02	-0.02	-0.02	-0.02	-0.02	-0.02	-0.02	-0.02	-0.02	-0.02	-0.02
	-0.02	-0.02	-0.02	-0.02	-0.02	-0.02	-0.02	-0.02	-0.02	-0.02	-0.02
	-0.02	-0.02	-0.02	-0.02	-0.02	-0.02	-0.02	-0.02	-0.02	-0.02	-0.02
	-0.02	-0.02	-0.02	-0.02	-0.02	-0.02	-0.02	-0.02	-0.02	-0.02	-0.02
	-0.02	-0.02	-0.02	-0.02	-0.02	-0.02	-0.02	-0.02	-0.02	-0.02	-0.02
	-0.02	-0.02	-0.02								
35	-0.03	-0.03	-0.02	-0.02	-0.03	-0.03	-0.02	-0.02	-0.02	-0.02	-0.02
	-0.02	-0.02	-0.02	-0.02	-0.02	-0.02	-0.02	-0.02	-0.02	-0.02	-0.02
	-0.02	-0.02	-0.02	-0.02	-0.02	-0.02	-0.02	-0.02	-0.02	-0.02	-0.02
	-0.02	-0.02	-0.02	-0.02	-0.02	-0.02	-0.02	-0.02	-0.02	-0.02	-0.02
	-0.02	-0.02	-0.02	-0.02	-0.02	-0.02	-0.02	-0.02	-0.02	-0.02	-0.02
	-0.02	-0.02	-0.02	-0.02	-0.02	-0.02	-0.02	-0.02	-0.02	-0.02	-0.02
	-0.02	-0.02	-0.02	-0.02	-0.02	-0.02	-0.02	-0.02	-0.02	-0.02	-0.02
	-0.02	-0.02	-0.02								
38	-0.03	-0.03	-0.02	-0.02	-0.03	-0.03	-0.02	-0.02	-0.02	-0.02	-0.02
	-0.02	-0.02	-0.02	-0.02	-0.02	-0.02	-0.02	-0.02	-0.02	-0.02	-0.02
	-0.02	-0.02	-0.02	-0.02	-0.02	-0.02	-0.02	-0.02	-0.02	-0.02	-0.02
	-0.02	-0.02	-0.02	-0.02	-0.02	-0.02	-0.02	-0.02	-0.02	-0.02	-0.02
	-0.02	-0.02	-0.02	-0.02	-0.02	-0.02	-0.02	-0.02	-0.02	-0.02	-0.02
	-0.02	-0.02	-0.02	-0.02	-0.02	-0.02	-0.02	-0.02	-0.02	-0.02	-0.02
	-0.02	-0.02	-0.02	-0.02	-0.02	-0.02	-0.02	-0.02	-0.02	-0.02	-0.02
	-0.02	-0.02	-0.02								
41	-0.03	-0.03	-0.02	-0.02	-0.03	-0.03	-0.02	-0.02	-0.02	-0.02	-0.02
	-0.02	-0.02	-0.02	-0.02	-0.02	-0.02	-0.02	-0.02	-0.02	-0.02	-0.02
	-0.02	-0.02	-0.02	-0.02	-0.02	-0.02	-0.02	-0.02	-0.02	-0.02	-0.02
	-0.02	-0.02	-0.02	-0.02	-0.02	-0.02	-0.02	-0.02	-0.02	-0.02	-0.02
	-0.02	-0.02	-0.02	-0.02	-0.02	-0.02	-0.02	-0.02	-0.02	-0.02	-0.02
	-0.02	-0.02	-0.02	-0.02	-0.02	-0.02	-0.02	-0.02	-0.02	-0.02	-0.02
	-0.02	-0.02	-0.02	-0.02	-0.02	-0.02	-0.02	-0.02	-0.02	-0.02	-0.02
	-0.02	-0.02	-0.02								
44	-0.03	-0.03	-0.02	-0.02	-0.03	-0.03	-0.02	-0.02	-0.02	-0.02	-0.02
	-0.02	-0.02	-0.02	-0.02	-0.02	-0.02	-0.02	-0.02	-0.02	-0.02	-0.02
	-0.02	-0.02	-0.02	-0.02	-0.02	-0.02	-0.02	-0.02	-0.02	-0.02	-0.02
	-0.02	-0.02	-0.02	-0.02	-0.02	-0.02	-0.02	-0.02	-0.02	-0.02	-0.02
	-0.02	-0.02	-0.02	-0.02	-0.02	-0.02	-0.02	-0.02	-0.02	-0.02	-0.02
	-0.02	-0.02	-0.02	-0.02	-0.02	-0.02	-0.02	-0.02	-0.02	-0.02	-0.02
	-0.02	-0.02	-0.02	-0.02	-0.02	-0.02	-0.02	-0.02	-0.02	-0.02	-0.02
	-0.02	-0.02	-0.02								
47	-0.03	-0.03	-0.02	-0.02	-0.03	-0.03	-0.02	-0.02	-0.02	-0.02	-0.02
	-0.02	-0.02	-0.02	-0.02	-0.02	-0.02	-0.02	-0.02	-0.02	-0.02	-0.02

	-0.02	-0.02	-0.02	-0.02	-0.02	-0.02	-0.02	-0.02	-0.02	-0.02	-0.02
	-0.02	-0.02	-0.02	-0.02	-0.02	-0.02	-0.02	-0.02	-0.02	-0.02	-0.02
	-0.02	-0.02	-0.02	-0.02	-0.02	-0.02	-0.02	-0.02	-0.02	-0.02	-0.02
	-0.02	-0.02	-0.02	-0.02	-0.02	-0.02	-0.02	-0.02	-0.02	-0.02	-0.02
	-0.02	-0.02	-0.02	-0.02	-0.02	-0.02	-0.02	-0.02	-0.02	-0.02	-0.02
	-0.02	-0.02	-0.02								
50	-0.03	-0.03	-0.02	-0.02	-0.03	-0.03	-0.02	-0.02	-0.02	-0.02	-0.02
	-0.02	-0.02	-0.02	-0.02	-0.02	-0.02	-0.02	-0.02	-0.02	-0.02	-0.02
	-0.02	-0.02	-0.02	-0.02	-0.02	-0.02	-0.02	-0.02	-0.02	-0.02	-0.02
	-0.02	-0.02	-0.02	-0.02	-0.02	-0.02	-0.02	-0.02	-0.02	-0.02	-0.02
	-0.02	-0.02	-0.02	-0.02	-0.02	-0.02	-0.02	-0.02	-0.02	-0.02	-0.02
	-0.02	-0.02	-0.02	-0.02	-0.02	-0.02	-0.02	-0.02	-0.02	-0.02	-0.02
	-0.02	-0.02	-0.02	-0.02	-0.02	-0.02	-0.02	-0.02	-0.02	-0.02	-0.02
	-0.02	-0.02	-0.02								
53	-0.03	-0.03	-0.02	-0.02	-0.03	-0.03	-0.02	-0.02	-0.02	-0.02	-0.02
	-0.02	-0.02	-0.02	-0.02	-0.02	-0.02	-0.02	-0.02	-0.02	-0.02	-0.02
	-0.02	-0.02	-0.02	-0.02	-0.02	-0.02	-0.02	-0.02	-0.02	-0.02	-0.02
	-0.02	-0.02	-0.02	-0.02	-0.02	-0.02	-0.02	-0.02	-0.02	-0.02	-0.02
	-0.02	-0.02	-0.02	-0.02	-0.02	-0.02	-0.02	-0.02	-0.02	-0.02	-0.02
	-0.02	-0.02	-0.02	-0.02	-0.02	-0.02	-0.02	-0.02	-0.02	-0.02	-0.02
	-0.02	-0.02	-0.02	-0.02	-0.02	-0.02	-0.02	-0.02	-0.02	-0.02	-0.02
	-0.02	-0.02	-0.02								

-OMISSIS-

2014	-0.03	-0.03	-0.02	-0.02	-0.03	-0.03	-0.02	-0.02	-0.02	-0.02	-0.02
	-0.02	-0.02	-0.02	-0.02	-0.02	-0.02	-0.02	-0.02	-0.02	-0.02	-0.02
	-0.02	-0.02	-0.03	-0.03	-0.02	-0.01	-0.03	-0.03	-0.02	-0.01	-0.02
	-0.02	-0.02	-0.02	-0.02	-0.02	-0.02	-0.02	-0.02	-0.02	-0.02	-0.02
	-0.02	-0.02	-0.02	-0.02	-0.02	-0.02	-0.02	-0.02	-0.02	-0.02	-0.02
	-0.02	-0.03	-0.03	-0.02	-0.02	-0.03	-0.03	-0.02	-0.02	-0.02	-0.02
	-0.02	-0.02	-0.02	-0.02	-0.02	-0.02	-0.02	-0.02	-0.02	-0.02	-0.02
	-0.02	-0.02	-0.02								
2015	-0.03	-0.03	-0.02	-0.02	-0.03	-0.03	-0.02	-0.02	-0.02	-0.02	-0.02
	-0.02	-0.02	-0.02	-0.02	-0.02	-0.02	-0.02	-0.02	-0.02	-0.02	-0.02
	-0.02	-0.02	-0.02	-0.02	-0.02	-0.02	-0.02	-0.02	-0.02	-0.02	-0.02
	-0.02	-0.02	-0.02	-0.02	-0.02	-0.02	-0.02	-0.02	-0.02	-0.02	-0.02
	-0.02	-0.02	-0.02	-0.02	-0.02	-0.02	-0.02	-0.02	-0.02	-0.02	-0.02
	-0.02	-0.02	-0.02	-0.02	-0.02	-0.02	-0.02	-0.02	-0.02	-0.02	-0.02
	-0.02	-0.02	-0.02	-0.02	-0.02	-0.02	-0.02	-0.02	-0.02	-0.02	-0.02
	-0.02	-0.02	-0.02								
2016	-0.03	-0.03	-0.02	-0.02	-0.03	-0.03	-0.02	-0.02	-0.02	-0.02	-0.02
	-0.02	-0.02	-0.02	-0.02	-0.02	-0.03	-0.02	-0.02	-0.02	-0.03	-0.02
	-0.02	-0.02	-0.03	-0.03	-0.02	-0.02	-0.03	-0.03	-0.02	-0.02	-0.03
	-0.02	-0.02	-0.02	-0.03	-0.02	-0.02	-0.02	-0.03	-0.02	-0.02	-0.02
	-0.03	-0.02	-0.02	-0.02	-0.03	-0.02	-0.02	-0.02	-0.03	-0.02	-0.02
	-0.02	-0.03	-0.03	-0.02	-0.02	-0.03	-0.03	-0.02	-0.02	-0.02	-0.02
	-0.02	-0.02	-0.03	-0.02	-0.02	-0.02	-0.02	-0.02	-0.02	-0.02	-0.03
	-0.02	-0.02	-0.02								
2017	-0.03	-0.03	-0.02	-0.02	-0.03	-0.03	-0.02	-0.02	-0.02	-0.02	-0.02
	-0.02	-0.02	-0.02	-0.02	-0.02	-0.03	-0.02	-0.02	-0.02	-0.03	-0.03
	-0.02	-0.02	-0.03	-0.03	-0.02	-0.01	-0.03	-0.03	-0.02	-0.01	-0.03
	-0.02	-0.02	-0.02	-0.03	-0.02	-0.02	-0.02	-0.03	-0.02	-0.02	-0.02
	-0.03	-0.02	-0.02	-0.02	-0.03	-0.02	-0.02	-0.02	-0.03	-0.02	-0.02
	-0.02	-0.03	-0.03	-0.02	-0.01	-0.03	-0.03	-0.02	-0.01	-0.02	-0.02
	-0.02	-0.02	-0.03	-0.02	-0.02	-0.02	-0.02	-0.02	-0.02	-0.02	-0.03
	-0.02	-0.02	-0.02								
2018	-0.03	-0.03	-0.02	-0.02	-0.03	-0.03	-0.02	-0.02	-0.02	-0.02	-0.02
	-0.02	-0.02	-0.02	-0.02	-0.02	-0.03	-0.02	-0.02	-0.02	-0.03	-0.02
	-0.02	-0.02	-0.03	-0.03	-0.02	-0.02	-0.03	-0.03	-0.02	-0.02	-0.03

	-0.02	-0.02	-0.02	-0.03	-0.02	-0.02	-0.02	-0.03	-0.02	-0.02	-0.02
	-0.03	-0.02	-0.02	-0.02	-0.02	-0.02	-0.02	-0.02	-0.02	-0.02	-0.02
	-0.02	-0.03	-0.03	-0.02	-0.02	-0.03	-0.03	-0.02	-0.02	-0.02	-0.02
	-0.02	-0.02	-0.02	-0.02	-0.02	-0.02	-0.02	-0.02	-0.02	-0.02	-0.02
	-0.02	-0.02	-0.02								
2019	-0.03	-0.03	-0.02	-0.02	-0.03	-0.03	-0.02	-0.02	-0.02	-0.02	-0.02
	-0.02	-0.02	-0.02	-0.02	-0.02	-0.02	-0.02	-0.02	-0.02	-0.02	-0.02
	-0.02	-0.02	-0.03	-0.02	-0.02	-0.02	-0.03	-0.02	-0.02	-0.02	-0.02
	-0.02	-0.02	-0.02	-0.02	-0.02	-0.02	-0.02	-0.02	-0.02	-0.02	-0.02
	-0.02	-0.02	-0.02	-0.02	-0.02	-0.02	-0.02	-0.02	-0.02	-0.02	-0.02
	-0.02	-0.02	-0.02	-0.02	-0.02	-0.02	-0.02	-0.02	-0.02	-0.02	-0.02
	-0.02	-0.02	-0.02	-0.02	-0.02	-0.02	-0.02	-0.02	-0.02	-0.02	-0.02
	-0.02	-0.02	-0.02								
2020	-0.03	-0.03	-0.02	-0.02	-0.03	-0.03	-0.02	-0.02	-0.02	-0.02	-0.02
	-0.02	-0.02	-0.02	-0.02	-0.02	-0.02	-0.02	-0.02	-0.02	-0.02	-0.02
	-0.02	-0.02	-0.02	-0.02	-0.02	-0.02	-0.02	-0.02	-0.02	-0.02	-0.02
	-0.02	-0.02	-0.02	-0.02	-0.02	-0.02	-0.02	-0.02	-0.02	-0.02	-0.02
	-0.02	-0.02	-0.02	-0.02	-0.02	-0.02	-0.02	-0.02	-0.02	-0.02	-0.02
	-0.02	-0.02	-0.02	-0.02	-0.02	-0.02	-0.02	-0.02	-0.02	-0.02	-0.02
	-0.02	-0.02	-0.02	-0.02	-0.02	-0.02	-0.02	-0.02	-0.02	-0.02	-0.02
	-0.02	-0.02	-0.02								
2021	-0.03	-0.03	-0.02	-0.02	-0.03	-0.03	-0.02	-0.02	-0.02	-0.02	-0.02
	-0.02	-0.02	-0.02	-0.02	-0.02	-0.03	-0.02	-0.02	-0.02	-0.03	-0.02
	-0.02	-0.02	-0.03	-0.03	-0.02	-0.02	-0.03	-0.03	-0.02	-0.02	-0.03
	-0.02	-0.02	-0.02	-0.03	-0.02	-0.02	-0.02	-0.03	-0.02	-0.02	-0.02
	-0.03	-0.02	-0.02	-0.02	-0.03	-0.02	-0.02	-0.02	-0.03	-0.02	-0.02
	-0.02	-0.03	-0.03	-0.02	-0.02	-0.03	-0.03	-0.02	-0.02	-0.02	-0.02
	-0.02	-0.02	-0.03	-0.02	-0.02	-0.02	-0.02	-0.02	-0.02	-0.02	-0.03
	-0.02	-0.02	-0.02								
2022	-0.03	-0.03	-0.02	-0.02	-0.03	-0.03	-0.02	-0.02	-0.02	-0.02	-0.02
	-0.02	-0.02	-0.02	-0.02	-0.02	-0.02	-0.01	-0.03	-0.02	-0.02	-0.01
	-0.03	-0.02	-0.01	-0.01	-0.03	-0.03	-0.01	-0.01	-0.03	-0.03	-0.02
	-0.02	-0.02	-0.02	-0.02	-0.02	-0.02	-0.02	-0.02	-0.02	-0.02	-0.02
	-0.02	-0.02	-0.02	-0.02	-0.02	-0.02	-0.03	-0.02	-0.02	-0.02	-0.03
	-0.02	-0.01	-0.01	-0.03	-0.03	-0.01	-0.01	-0.03	-0.03	-0.02	-0.02
	-0.02	-0.02	-0.02	-0.02	-0.02	-0.02	-0.02	-0.02	-0.02	-0.02	-0.02
	-0.02	-0.02	-0.02								
2023	-0.02	-0.02	-0.02	-0.02	-0.03	-0.03	-0.02	-0.02	-0.02	-0.02	-0.02
	-0.02	-0.02	-0.02	-0.02	-0.02	-0.01	-0.01	-0.02	-0.02	-0.01	-0.01
	-0.02	-0.02	-0.01	-0.01	-0.03	-0.02	-0.01	-0.01	-0.03	-0.02	-0.02
	-0.02	-0.02	-0.02	-0.02	-0.01	-0.02	-0.02	-0.02	-0.01	-0.02	-0.02
	-0.02	-0.01	-0.02	-0.02	-0.01	-0.01	-0.02	-0.02	-0.01	-0.01	-0.02
	-0.02	-0.01	-0.01	-0.03	-0.02	-0.01	-0.01	-0.03	-0.02	-0.02	-0.02
	-0.02	-0.02	-0.02	-0.01	-0.02	-0.02	-0.02	-0.02	-0.02	-0.02	-0.02
	-0.01	-0.02	-0.02								
2024	-0.02	-0.02	-0.02	-0.02	-0.02	-0.02	-0.02	-0.02	-0.02	-0.02	-0.02
	-0.02	-0.02	-0.02	-0.02	-0.02	-0.01	-0.01	-0.02	-0.02	-0.01	-0.01
	-0.02	-0.02	-0.01	-0.01	-0.02	-0.02	-0.01	-0.01	-0.02	-0.02	-0.02
	-0.01	-0.02	-0.02	-0.02	-0.01	-0.02	-0.02	-0.02	-0.01	-0.02	-0.02
	-0.02	-0.01	-0.02	-0.02	-0.01	-0.01	-0.02	-0.02	-0.01	-0.01	-0.02
	-0.02	-0.01	-0.01	-0.02	-0.02	-0.01	-0.01	-0.02	-0.02	-0.02	-0.01
	-0.02	-0.02	-0.02	-0.01	-0.02	-0.02	-0.02	-0.01	-0.02	-0.02	-0.02
	-0.01	-0.02	-0.02								
2025	-0.02	-0.02	-0.02	-0.02	-0.02	-0.02	-0.02	-0.02	-0.02	-0.02	-0.02
	-0.02	-0.02	-0.02	-0.02	-0.02	-0.01	-0.01	-0.02	-0.02	-0.01	-0.01
	-0.02	-0.02	-0.01	-0.01	-0.02	-0.02	-0.01	-0.01	-0.02	-0.02	-0.02
	-0.01	-0.02	-0.02	-0.02	-0.01	-0.02	-0.02	-0.02	-0.01	-0.02	-0.02
	-0.02	-0.01	-0.02	-0.02	-0.02	-0.01	-0.02	-0.02	-0.02	-0.01	-0.02

	-0.02	-0.01	-0.01	-0.02	-0.02	-0.01	-0.01	-0.02	-0.02	-0.02	-0.01
	-0.02	-0.02	-0.02	-0.01	-0.02	-0.02	-0.02	-0.01	-0.02	-0.02	-0.02
	-0.01	-0.02	-0.02								
2026	-0.02	-0.02	-0.02	-0.02	-0.02	-0.02	-0.02	-0.02	-0.02	-0.02	-0.02
	-0.02	-0.02	-0.02	-0.02	-0.02	-0.02	-0.01	-0.02	-0.02	-0.02	-0.01
	-0.02	-0.02	-0.02	-0.01	-0.02	-0.02	-0.02	-0.01	-0.02	-0.02	-0.02
	-0.01	-0.02	-0.02	-0.02	-0.01	-0.02	-0.02	-0.02	-0.01	-0.02	-0.02
	-0.02	-0.01	-0.02	-0.02	-0.02	-0.02	-0.02	-0.02	-0.02	-0.02	-0.02
	-0.02	-0.02	-0.01	-0.02	-0.02	-0.02	-0.01	-0.02	-0.02	-0.02	-0.01
	-0.02	-0.02	-0.02	-0.01	-0.02	-0.02	-0.02	-0.01	-0.02	-0.02	-0.02
	-0.01	-0.02	-0.02								
2027	-0.03	-0.03	-0.02	-0.02	-0.03	-0.03	-0.02	-0.02	-0.02	-0.02	-0.02
	-0.02	-0.02	-0.02	-0.02	-0.02	-0.02	-0.02	-0.02	-0.02	-0.02	-0.02
	-0.02	-0.02	-0.02	-0.02	-0.02	-0.02	-0.02	-0.02	-0.02	-0.02	-0.02
	-0.02	-0.02	-0.02	-0.02	-0.02	-0.02	-0.02	-0.02	-0.02	-0.02	-0.02
	-0.02	-0.02	-0.02	-0.02	-0.02	-0.02	-0.02	-0.02	-0.02	-0.02	-0.02
	-0.02	-0.02	-0.02	-0.02	-0.02	-0.02	-0.02	-0.02	-0.02	-0.02	-0.02
	-0.02	-0.02	-0.02	-0.02	-0.02	-0.02	-0.02	-0.02	-0.02	-0.02	-0.02
	-0.02	-0.02	-0.02								
2028	-0.03	-0.03	-0.02	-0.02	-0.03	-0.03	-0.02	-0.02	-0.02	-0.02	-0.02
	-0.02	-0.02	-0.02	-0.02	-0.02	-0.02	-0.02	-0.02	-0.02	-0.02	-0.02
	-0.02	-0.02	-0.02	-0.02	-0.03	-0.02	-0.02	-0.01	-0.03	-0.02	-0.02
	-0.02	-0.02	-0.02	-0.02	-0.02	-0.02	-0.02	-0.02	-0.02	-0.02	-0.02
	-0.02	-0.02	-0.02	-0.02	-0.02	-0.02	-0.02	-0.02	-0.02	-0.02	-0.02
	-0.02	-0.02	-0.02	-0.03	-0.02	-0.02	-0.02	-0.03	-0.02	-0.02	-0.02
	-0.02	-0.02	-0.02	-0.02	-0.02	-0.02	-0.02	-0.02	-0.02	-0.02	-0.02
	-0.02	-0.02	-0.02								
2029	-0.03	-0.03	-0.02	-0.02	-0.03	-0.03	-0.02	-0.02	-0.02	-0.02	-0.02
	-0.02	-0.02	-0.02	-0.02	-0.02	-0.02	-0.02	-0.02	-0.02	-0.02	-0.02
	-0.02	-0.02	-0.02	-0.02	-0.02	-0.02	-0.02	-0.02	-0.02	-0.02	-0.02
	-0.02	-0.02	-0.02	-0.02	-0.02	-0.02	-0.02	-0.02	-0.02	-0.02	-0.02
	-0.02	-0.02	-0.02	-0.02	-0.02	-0.02	-0.02	-0.02	-0.02	-0.02	-0.02
	-0.02	-0.02	-0.02	-0.02	-0.02	-0.02	-0.02	-0.02	-0.02	-0.02	-0.02
	-0.02	-0.02	-0.02	-0.02	-0.02	-0.02	-0.02	-0.02	-0.02	-0.02	-0.02
	-0.02	-0.02	-0.02								
2030	-0.03	-0.03	-0.02	-0.02	-0.03	-0.03	-0.02	-0.02	-0.02	-0.02	-0.02
	-0.02	-0.02	-0.02	-0.02	-0.02	-0.02	-0.01	-0.03	-0.02	-0.02	-0.01
	-0.03	-0.02	-0.01	-0.01	-0.03	-0.03	-0.01	-0.01	-0.03	-0.03	-0.02
	-0.02	-0.02	-0.02	-0.02	-0.02	-0.02	-0.02	-0.02	-0.02	-0.02	-0.02
	-0.02	-0.02	-0.03	-0.02	-0.02	-0.02	-0.03	-0.02	-0.02	-0.02	-0.03
	-0.02	-0.01	-0.01	-0.03	-0.03	-0.01	-0.01	-0.03	-0.03	-0.02	-0.02
	-0.02	-0.02	-0.02	-0.02	-0.02	-0.02	-0.02	-0.02	-0.02	-0.02	-0.02
	-0.02	-0.02	-0.02								
2031	-0.03	-0.03	-0.02	-0.02	-0.03	-0.03	-0.02	-0.02	-0.02	-0.02	-0.02
	-0.02	-0.02	-0.02	-0.02	-0.02	-0.02	-0.02	-0.03	-0.03	-0.02	-0.02
	-0.03	-0.03	-0.02	-0.01	-0.03	-0.03	-0.02	-0.01	-0.03	-0.03	-0.02
	-0.02	-0.03	-0.02	-0.02	-0.02	-0.03	-0.02	-0.02	-0.02	-0.03	-0.02
	-0.02	-0.02	-0.03	-0.02	-0.02	-0.02	-0.03	-0.03	-0.02	-0.02	-0.03
	-0.03	-0.02	-0.01	-0.03	-0.03	-0.02	-0.01	-0.03	-0.03	-0.02	-0.02
	-0.02	-0.02	-0.02	-0.02	-0.03	-0.02	-0.02	-0.02	-0.02	-0.02	-0.02
	-0.02	-0.03	-0.02								
2032	-0.03	-0.03	-0.02	-0.02	-0.03	-0.03	-0.02	-0.02	-0.02	-0.02	-0.02
	-0.02	-0.02	-0.02	-0.02	-0.02	-0.02	-0.02	-0.03	-0.02	-0.02	-0.02
	-0.03	-0.02	-0.02	-0.02	-0.03	-0.03	-0.02	-0.02	-0.03	-0.03	-0.02
	-0.02	-0.03	-0.02	-0.02	-0.02	-0.03	-0.02	-0.02	-0.02	-0.03	-0.02
	-0.02	-0.02	-0.03	-0.02	-0.02	-0.02	-0.03	-0.02	-0.02	-0.02	-0.03
	-0.02	-0.02	-0.02	-0.03	-0.03	-0.02	-0.02	-0.03	-0.03	-0.02	-0.02
	-0.02	-0.02	-0.02	-0.02	-0.03	-0.02	-0.02	-0.02	-0.02	-0.02	-0.02

	-0.02	-0.03	-0.02								
2033	-0.03	-0.03	-0.02	-0.02	-0.03	-0.03	-0.02	-0.02	-0.02	-0.02	-0.02
	-0.02	-0.02	-0.02	-0.02	-0.02	-0.02	-0.02	-0.03	-0.02	-0.02	-0.02
	-0.03	-0.02	-0.02	-0.02	-0.03	-0.03	-0.02	-0.02	-0.03	-0.03	-0.02
	-0.02	-0.02	-0.02	-0.02	-0.02	-0.03	-0.02	-0.02	-0.02	-0.03	-0.02
	-0.02	-0.02	-0.03	-0.02	-0.02	-0.02	-0.02	-0.02	-0.02	-0.02	-0.02
	-0.02	-0.02	-0.02	-0.03	-0.03	-0.02	-0.02	-0.03	-0.03	-0.02	-0.02
	-0.02	-0.02	-0.02	-0.02	-0.02	-0.02	-0.02	-0.02	-0.02	-0.02	-0.02
	-0.02	-0.02	-0.02								
2034	-0.03	-0.03	-0.02	-0.02	-0.03	-0.03	-0.02	-0.02	-0.02	-0.02	-0.02
	-0.02	-0.02	-0.02	-0.02	-0.02	-0.02	-0.02	-0.02	-0.02	-0.02	-0.02
	-0.02	-0.02	-0.02	-0.02	-0.03	-0.02	-0.02	-0.02	-0.03	-0.02	-0.02
	-0.02	-0.02	-0.02	-0.02	-0.02	-0.02	-0.02	-0.02	-0.02	-0.02	-0.02
	-0.02	-0.02	-0.02	-0.02	-0.02	-0.02	-0.02	-0.02	-0.02	-0.02	-0.02
	-0.02	-0.02	-0.02	-0.02	-0.02	-0.02	-0.02	-0.02	-0.02	-0.02	-0.02
	-0.02	-0.02	-0.02	-0.02	-0.02	-0.02	-0.02	-0.02	-0.02	-0.02	-0.02
	-0.02	-0.02	-0.02								
2035	-0.03	-0.03	-0.02	-0.02	-0.03	-0.03	-0.02	-0.02	-0.02	-0.02	-0.02
	-0.02	-0.02	-0.02	-0.02	-0.02	-0.02	-0.02	-0.02	-0.02	-0.02	-0.02
	-0.02	-0.02	-0.02	-0.02	-0.02	-0.02	-0.02	-0.02	-0.02	-0.02	-0.02
	-0.02	-0.02	-0.02	-0.02	-0.02	-0.02	-0.02	-0.02	-0.02	-0.02	-0.02
	-0.02	-0.02	-0.02	-0.02	-0.02	-0.02	-0.02	-0.02	-0.02	-0.02	-0.02
	-0.02	-0.02	-0.02	-0.02	-0.02	-0.02	-0.02	-0.02	-0.02	-0.02	-0.02
	-0.02	-0.02	-0.02	-0.02	-0.02	-0.02	-0.02	-0.02	-0.02	-0.02	-0.02
	-0.02	-0.02	-0.02								
2036	-0.03	-0.03	-0.02	-0.02	-0.03	-0.03	-0.02	-0.02	-0.02	-0.02	-0.02
	-0.02	-0.02	-0.02	-0.02	-0.02	-0.02	-0.02	-0.02	-0.02	-0.02	-0.02
	-0.02	-0.02	-0.01	-0.01	-0.03	-0.03	-0.01	-0.01	-0.03	-0.03	-0.02
	-0.02	-0.02	-0.02	-0.02	-0.02	-0.02	-0.02	-0.02	-0.02	-0.02	-0.02
	-0.02	-0.02	-0.02	-0.02	-0.02	-0.02	-0.02	-0.02	-0.02	-0.02	-0.02
	-0.02	-0.01	-0.01	-0.03	-0.03	-0.01	-0.01	-0.03	-0.03	-0.02	-0.02
	-0.02	-0.02	-0.02	-0.02	-0.02	-0.02	-0.02	-0.02	-0.02	-0.02	-0.02
	-0.02	-0.02	-0.02								
2037	-0.03	-0.03	-0.02	-0.02	-0.03	-0.03	-0.02	-0.02	-0.02	-0.02	-0.02
	-0.02	-0.02	-0.02	-0.02	-0.02	-0.02	-0.02	-0.03	-0.02	-0.02	-0.02
	-0.03	-0.02	-0.02	-0.02	-0.03	-0.03	-0.02	-0.02	-0.03	-0.03	-0.02
	-0.02	-0.03	-0.02	-0.02	-0.02	-0.03	-0.02	-0.02	-0.02	-0.03	-0.02
	-0.02	-0.02	-0.03	-0.02	-0.02	-0.02	-0.03	-0.02	-0.02	-0.02	-0.03
	-0.02	-0.02	-0.02	-0.03	-0.03	-0.02	-0.02	-0.03	-0.03	-0.02	-0.02
	-0.02	-0.02	-0.02	-0.02	-0.03	-0.02	-0.02	-0.02	-0.02	-0.02	-0.02
	-0.02	-0.03	-0.02								
2038	-0.03	-0.03	-0.02	-0.02	-0.03	-0.03	-0.03	-0.03	-0.03	-0.03	-0.03
	-0.03	-0.03	-0.03	-0.03	-0.03	-0.03	-0.03	-0.02	-0.02	-0.03	-0.03
	-0.02	-0.02	-0.04	-0.03	-0.02	-0.02	-0.04	-0.03	-0.02	-0.02	-0.03
	-0.03	-0.03	-0.02	-0.03	-0.03	-0.02	-0.02	-0.03	-0.03	-0.03	-0.02
	-0.03	-0.03	-0.02	-0.02	-0.03	-0.03	-0.02	-0.02	-0.03	-0.03	-0.02
	-0.02	-0.04	-0.03	-0.02	-0.02	-0.04	-0.03	-0.02	-0.02	-0.03	-0.03
	-0.03	-0.02	-0.03	-0.03	-0.02	-0.02	-0.03	-0.03	-0.03	-0.02	-0.03
	-0.03	-0.02	-0.02								
2039	-0.03	-0.03	-0.02	-0.02	-0.03	-0.03	-0.02	-0.02	-0.02	-0.02	-0.02
	-0.02	-0.02	-0.02	-0.02	-0.02	-0.02	-0.02	-0.01	-0.01	-0.02	-0.02
	-0.01	-0.01	-0.02	-0.02	-0.01	-0.01	-0.02	-0.02	-0.01	-0.01	-0.02
	-0.02	-0.02	-0.02	-0.02	-0.02	-0.02	-0.02	-0.02	-0.02	-0.02	-0.02
	-0.02	-0.02	-0.02	-0.02	-0.02	-0.02	-0.01	-0.01	-0.02	-0.02	-0.01
	-0.01	-0.02	-0.02	-0.01	-0.01	-0.02	-0.02	-0.01	-0.01	-0.02	-0.02
	-0.02	-0.02	-0.02	-0.02	-0.02	-0.02	-0.02	-0.02	-0.02	-0.02	-0.02
	-0.02	-0.02	-0.02								
2040	-0.02	-0.02	-0.01	-0.01	-0.02	-0.02	-0.01	-0.01	-0.01	-0.01	-0.01

	-0.01	-0.01	-0.01	-0.01	-0.01	-0.01	-0.01	-8.60e-03	-8.76e-03	-0.01	-0.01
	-8.60e-03	-8.76e-03	-0.01	-0.01	-8.04e-03	-8.20e-03	-0.01	-0.01	-8.04e-03	-8.20e-03	-0.01
	-0.01	-0.01	-0.01	-0.01	-0.01	-9.96e-03	-0.01	-0.01	-0.01	-0.01	-0.01
	-0.01	-0.01	-9.96e-03	-0.01	-0.01	-0.01	-8.80e-03	-8.91e-03	-0.01	-0.01	-8.80e-03
	-8.91e-03	-0.01	-0.01	-8.25e-03	-8.37e-03	-0.01	-0.01	-8.25e-03	-8.37e-03	-0.01	-0.01
	-0.01	-0.01	-0.01	-0.01	-0.01	-0.01	-0.01	-0.01	-0.01	-0.01	-0.01
	-0.01	-0.01	-0.01								
2041	-0.01	-0.01	-7.23e-03	-7.24e-03	-0.01	-0.01	-8.28e-03	-8.29e-03	-7.31e-03	-7.32e-03	-8.01e-03
	-8.02e-03	-7.08e-03	-7.08e-03	-7.31e-03	-7.08e-03	-8.07e-03	-8.17e-03	-5.99e-03	-6.09e-03	-8.07e-03	-8.17e-03
	-5.99e-03	-6.09e-03	-8.32e-03	-8.42e-03	-5.74e-03	-5.84e-03	-8.32e-03	-8.42e-03	-5.74e-03	-5.84e-03	-7.23e-03
	-7.56e-03	-6.60e-03	-6.93e-03	-7.30e-03	-7.63e-03	-6.53e-03	-6.86e-03	-7.22e-03	-7.56e-03	-6.60e-03	-6.94e-03
	-7.30e-03	-7.64e-03	-6.52e-03	-6.87e-03	-8.00e-03	-8.08e-03	-6.08e-03	-6.16e-03	-8.00e-03	-8.08e-03	-6.08e-03
	-6.16e-03	-8.25e-03	-8.32e-03	-5.84e-03	-5.91e-03	-8.25e-03	-8.32e-03	-5.84e-03	-5.91e-03	-7.25e-03	-7.49e-03
	-6.67e-03	-6.91e-03	-7.32e-03	-7.56e-03	-6.60e-03	-6.84e-03	-7.24e-03	-7.49e-03	-6.67e-03	-6.92e-03	-7.32e-03
	-7.57e-03	-6.59e-03	-6.84e-03								
2042	-7.72e-03	-7.71e-03	-5.62e-03	-5.60e-03	-8.81e-03	-8.80e-03	-6.70e-03	-6.69e-03	-5.56e-03	-5.55e-03	-6.28e-03
	-6.28e-03	-5.32e-03	-5.32e-03	-5.56e-03	-5.32e-03	-5.64e-03	-5.72e-03	-4.92e-03	-5.00e-03	-5.64e-03	-5.72e-03
	-4.92e-03	-5.00e-03	-5.74e-03	-5.81e-03	-4.83e-03	-4.91e-03	-5.73e-03	-5.81e-03	-4.83e-03	-4.91e-03	-5.31e-03
	-5.55e-03	-5.09e-03	-5.33e-03	-5.33e-03	-5.58e-03	-5.06e-03	-5.31e-03	-5.30e-03	-5.56e-03	-5.08e-03	-5.34e-03
	-5.33e-03	-5.58e-03	-5.06e-03	-5.31e-03	-5.62e-03	-5.68e-03	-4.97e-03	-5.02e-03	-5.62e-03	-5.68e-03	-4.96e-03
	-5.02e-03	-5.71e-03	-5.77e-03	-4.87e-03	-4.93e-03	-5.71e-03	-5.77e-03	-4.87e-03	-4.93e-03	-5.33e-03	-5.51e-03
	-5.13e-03	-5.31e-03	-5.36e-03	-5.54e-03	-5.11e-03	-5.28e-03	-5.33e-03	-5.51e-03	-5.13e-03	-5.32e-03	-5.35e-03
	-5.54e-03	-5.10e-03	-5.29e-03								
2043	-6.90e-03	-6.87e-03	-5.04e-03	-5.01e-03	-8.00e-03	-7.98e-03	-6.14e-03	-6.13e-03	-4.93e-03	-4.91e-03	-5.66e-03
	-5.65e-03	-4.69e-03	-4.68e-03	-4.93e-03	-4.69e-03	-4.74e-03	-4.81e-03	-4.56e-03	-4.63e-03	-4.74e-03	-4.81e-03
	-4.56e-03	-4.63e-03	-4.76e-03	-4.83e-03	-4.54e-03	-4.61e-03	-4.75e-03	-4.83e-03	-4.54e-03	-4.62e-03	-4.59e-03
	-4.83e-03	-4.54e-03	-4.78e-03	-4.60e-03	-4.83e-03	-4.54e-03	-4.77e-03	-4.59e-03	-4.83e-03	-4.54e-03	-4.78e-03
	-4.60e-03	-4.84e-03	-4.53e-03	-4.77e-03	-4.74e-03	-4.79e-03	-4.58e-03	-4.63e-03	-4.74e-03	-4.79e-03	-4.58e-03
	-4.63e-03	-4.75e-03	-4.81e-03	-4.56e-03	-4.62e-03	-4.75e-03	-4.81e-03	-4.56e-03	-4.62e-03	-4.62e-03	-4.79e-03
	-4.58e-03	-4.75e-03	-4.63e-03	-4.80e-03	-4.57e-03	-4.74e-03	-4.62e-03	-4.80e-03	-4.57e-03	-4.75e-03	-4.63e-03
	-4.80e-03	-4.57e-03	-4.74e-03								
2044	-6.69e-03	-6.66e-03	-4.90e-03	-4.88e-03	-7.80e-03	-7.78e-03	-6.01e-03	-5.99e-03	-4.77e-03	-4.75e-03	-5.51e-03
	-5.50e-03	-4.53e-03	-4.52e-03	-4.77e-03	-4.53e-03	-4.54e-03	-4.63e-03	-4.43e-03	-4.51e-03	-4.54e-03	-4.63e-03
	-4.43e-03	-4.51e-03	-4.55e-03	-4.63e-03	-4.43e-03	-4.51e-03	-4.55e-03	-4.63e-03	-4.43e-03	-4.51e-03	-4.41e-03
	-4.68e-03	-4.37e-03	-4.65e-03	-4.41e-03	-4.68e-03	-4.37e-03	-4.64e-03	-4.41e-03	-4.68e-03	-4.37e-03	-4.65e-03
	-4.41e-03	-4.68e-03	-4.37e-03	-4.65e-03	-4.55e-03	-4.61e-03	-4.45e-03	-4.51e-03	-4.55e-03	-4.61e-03	-4.45e-03
	-4.51e-03	-4.55e-03	-4.61e-03	-4.44e-03	-4.50e-03	-4.55e-03	-4.61e-03	-4.44e-03	-4.50e-03	-4.44e-03	-4.64e-03
	-4.41e-03	-4.61e-03	-4.45e-03	-4.64e-03	-4.41e-03	-4.61e-03	-4.44e-03	-4.64e-03	-4.41e-03	-4.61e-03	-4.44e-03
	-4.64e-03	-4.41e-03	-4.61e-03								
2045	-6.69e-03	-6.66e-03	-4.89e-03	-4.86e-03	-7.79e-03	-7.78e-03	-5.99e-03	-5.97e-03	-4.77e-03	-4.75e-03	-5.50e-03
	-5.49e-03	-4.53e-03	-4.52e-03	-4.77e-03	-4.53e-03	-4.53e-03	-4.66e-03	-4.40e-03	-4.52e-03	-4.53e-03	-4.65e-03
	-4.40e-03	-4.52e-03	-4.54e-03	-4.66e-03	-4.40e-03	-4.52e-03	-4.54e-03	-4.66e-03	-4.40e-03	-4.52e-03	-4.34e-03
	-4.75e-03	-4.30e-03	-4.71e-03	-4.34e-03	-4.75e-03	-4.30e-03	-4.71e-03	-4.34e-03	-4.75e-03	-4.30e-03	-4.71e-03
	-4.34e-03	-4.75e-03	-4.30e-03	-4.71e-03	-4.54e-03	-4.63e-03	-4.42e-03	-4.51e-03	-4.54e-03	-4.63e-03	-4.43e-03
	-4.51e-03	-4.55e-03	-4.64e-03	-4.42e-03	-4.51e-03	-4.55e-03	-4.64e-03	-4.42e-03	-4.51e-03	-4.40e-03	-4.69e-03
	-4.36e-03	-4.66e-03	-4.40e-03	-4.70e-03	-4.36e-03	-4.66e-03	-4.40e-03	-4.69e-03	-4.36e-03	-4.66e-03	-4.40e-03
	-4.70e-03	-4.36e-03	-4.66e-03								
2046	-6.92e-03	-6.89e-03	-5.03e-03	-5.00e-03	-8.01e-03	-7.99e-03	-6.12e-03	-6.11e-03	-4.94e-03	-4.92e-03	-5.67e-03
	-5.66e-03	-4.70e-03	-4.70e-03	-4.94e-03	-4.70e-03	-4.72e-03	-4.85e-03	-4.55e-03	-4.68e-03	-4.72e-03	-4.85e-03
	-4.55e-03	-4.68e-03	-4.72e-03	-4.85e-03	-4.55e-03	-4.68e-03	-4.72e-03	-4.85e-03	-4.55e-03	-4.68e-03	-4.50e-03
	-4.95e-03	-4.45e-03	-4.90e-03	-4.50e-03	-4.95e-03	-4.45e-03	-4.89e-03	-4.51e-03	-4.95e-03	-4.45e-03	-4.89e-03
	-4.51e-03	-4.95e-03	-4.45e-03	-4.89e-03	-4.72e-03	-4.82e-03	-4.58e-03	-4.68e-03	-4.72e-03	-4.82e-03	-4.58e-03
	-4.68e-03	-4.73e-03	-4.82e-03	-4.58e-03	-4.67e-03	-4.73e-03	-4.82e-03	-4.58e-03	-4.67e-03	-4.56e-03	-4.88e-03
	-4.52e-03	-4.84e-03	-4.56e-03	-4.88e-03	-4.52e-03	-4.84e-03	-4.56e-03	-4.88e-03	-4.52e-03	-4.84e-03	-4.56e-03
	-4.88e-03	-4.52e-03	-4.84e-03								
2047	-7.71e-03	-7.68e-03	-5.57e-03	-5.55e-03	-8.78e-03	-8.77e-03	-6.65e-03	-6.64e-03	-5.55e-03	-5.53e-03	-6.26e-03
	-6.25e-03	-5.31e-03	-5.30e-03	-5.55e-03	-5.31e-03	-5.56e-03	-5.66e-03	-4.95e-03	-5.05e-03	-5.56e-03	-5.66e-03
	-4.95e-03	-5.05e-03	-5.70e-03	-5.81e-03	-4.81e-03	-4.91e-03	-5.70e-03	-5.81e-03	-4.80e-03	-4.91e-03	-5.23e-03

	-5.57e-03	-5.04e-03	-5.39e-03	-5.27e-03	-5.61e-03	-5.00e-03	-5.34e-03	-5.22e-03	-5.57e-03	-5.04e-03	-5.39e-03
	-5.27e-03	-5.61e-03	-5.00e-03	-5.34e-03	-5.53e-03	-5.61e-03	-5.00e-03	-5.08e-03	-5.53e-03	-5.61e-03	-5.00e-03
	-5.08e-03	-5.69e-03	-5.76e-03	-4.85e-03	-4.92e-03	-5.69e-03	-5.76e-03	-4.85e-03	-4.92e-03	-5.26e-03	-5.51e-03
	-5.10e-03	-5.35e-03	-5.31e-03	-5.56e-03	-5.05e-03	-5.30e-03	-5.26e-03	-5.51e-03	-5.10e-03	-5.35e-03	-5.31e-03
	-5.56e-03	-5.05e-03	-5.31e-03								
2048	-9.77e-03	-9.77e-03	-6.99e-03	-7.00e-03	-0.01	-0.01	-8.03e-03	-8.03e-03	-7.12e-03	-7.13e-03	-7.81e-03
	-7.81e-03	-6.89e-03	-6.89e-03	-7.12e-03	-6.89e-03	-7.76e-03	-7.81e-03	-5.98e-03	-6.02e-03	-7.81e-03	-7.76e-03
	-6.02e-03	-5.98e-03	-8.24e-03	-8.28e-03	-5.50e-03	-5.55e-03	-8.28e-03	-8.24e-03	-5.54e-03	-5.50e-03	-7.09e-03
	-7.23e-03	-6.55e-03	-6.70e-03	-7.23e-03	-7.38e-03	-6.41e-03	-6.55e-03	-7.23e-03	-7.09e-03	-6.69e-03	-6.56e-03
	-7.37e-03	-7.23e-03	-6.55e-03	-6.41e-03	-7.66e-03	-7.70e-03	-6.09e-03	-6.13e-03	-7.70e-03	-7.66e-03	-6.13e-03
	-6.09e-03	-8.16e-03	-8.20e-03	-5.59e-03	-5.62e-03	-8.20e-03	-8.16e-03	-5.62e-03	-5.59e-03	-7.07e-03	-7.19e-03
	-6.60e-03	-6.72e-03	-7.22e-03	-7.34e-03	-6.45e-03	-6.57e-03	-7.19e-03	-7.07e-03	-6.72e-03	-6.60e-03	-7.34e-03
	-7.22e-03	-6.57e-03	-6.45e-03								
2049	-0.01	-0.01	-0.01	-0.01	-0.02	-0.02	-0.01	-0.01	-0.01	-0.01	-0.01
	-0.01	-0.01	-0.01	-0.01	-0.01	-0.01	-0.01	-8.53e-03	-8.21e-03	-0.01	-0.01
	-8.51e-03	-8.22e-03	-0.01	-0.01	-7.36e-03	-7.04e-03	-0.01	-0.01	-7.35e-03	-7.05e-03	-0.01
	-0.01	-0.01	-9.31e-03	-0.01	-0.01	-0.01	-8.96e-03	-0.01	-0.01	-0.01	-9.36e-03
	-0.01	-0.01	-9.98e-03	-9.01e-03	-0.01	-0.01	-8.73e-03	-8.49e-03	-0.01	-0.01	-8.72e-03
	-8.50e-03	-0.01	-0.01	-7.51e-03	-7.28e-03	-0.01	-0.01	-7.50e-03	-7.29e-03	-0.01	-0.01
	-0.01	-9.53e-03	-0.01	-0.01	-9.95e-03	-9.16e-03	-0.01	-0.01	-0.01	-9.56e-03	-0.01
	-0.01	-9.92e-03	-9.19e-03								
2050	-0.02	-0.02	-0.02	-0.02	-0.02	-0.02	-0.02	-0.02	-0.02	-0.02	-0.02
	-0.02	-0.02	-0.02	-0.02	-0.02	-0.02	-0.02	-0.01	-0.01	-0.02	-0.02
	-0.01	-0.01	-0.02	-0.02	-0.01	-0.01	-0.02	-0.02	-0.01	-0.01	-0.02
	-0.02	-0.02	-0.01	-0.02	-0.02	-0.02	-0.01	-0.02	-0.02	-0.02	-0.01
	-0.02	-0.02	-0.02	-0.01	-0.02	-0.02	-0.01	-0.01	-0.02	-0.02	-0.01
	-0.01	-0.02	-0.02	-0.01	-0.01	-0.02	-0.02	-0.01	-0.01	-0.02	-0.02
	-0.02	-0.02	-0.02	-0.02	-0.02	-0.01	-0.02	-0.02	-0.02	-0.02	-0.02
	-0.02	-0.02	-0.01								
2051	-0.02	-0.02	-0.02	-0.02	-0.02	-0.02	-0.02	-0.02	-0.02	-0.02	-0.02
	-0.02	-0.02	-0.02	-0.02	-0.02	-0.02	-0.02	-0.01	-0.01	-0.02	-0.02
	-0.01	-0.01	-0.02	-0.02	-0.01	-0.01	-0.02	-0.02	-0.01	-0.01	-0.02
	-0.02	-0.02	-0.01	-0.02	-0.02	-0.02	-0.01	-0.02	-0.02	-0.02	-0.02
	-0.02	-0.02	-0.02	-0.01	-0.02	-0.02	-0.01	-0.01	-0.02	-0.02	-0.01
	-0.01	-0.02	-0.02	-0.01	-0.01	-0.02	-0.02	-0.01	-0.01	-0.02	-0.02
	-0.02	-0.02	-0.02	-0.02	-0.02	-0.01	-0.02	-0.02	-0.02	-0.02	-0.02
	-0.02	-0.02	-0.01								
2052	-0.03	-0.03	-0.02	-0.02	-0.03	-0.03	-0.02	-0.02	-0.02	-0.02	-0.02
	-0.02	-0.02	-0.02	-0.02	-0.02	-0.03	-0.03	-0.02	-0.02	-0.03	-0.03
	-0.02	-0.02	-0.03	-0.03	-0.01	-0.01	-0.03	-0.03	-0.01	-0.01	-0.03
	-0.02	-0.02	-0.02	-0.03	-0.02	-0.02	-0.02	-0.03	-0.02	-0.02	-0.02
	-0.03	-0.02	-0.02	-0.02	-0.03	-0.03	-0.02	-0.02	-0.03	-0.03	-0.02
	-0.02	-0.03	-0.03	-0.02	-0.01	-0.03	-0.03	-0.02	-0.01	-0.03	-0.02
	-0.02	-0.02	-0.03	-0.02	-0.02	-0.02	-0.03	-0.02	-0.02	-0.02	-0.03
	-0.02	-0.02	-0.02								
2053	-0.01	-0.01	-7.42e-03	-7.42e-03	-0.01	-0.01	-8.25e-03	-8.25e-03	-8.32e-03	-8.32e-03	-8.87e-03
	-8.87e-03	-8.13e-03	-8.14e-03	-8.32e-03	-8.13e-03	-8.24e-03	-8.25e-03	-8.02e-03	-8.03e-03	-8.25e-03	-8.24e-03
	-8.03e-03	-8.02e-03	-8.24e-03	-8.25e-03	-8.02e-03	-8.03e-03	-8.25e-03	-8.24e-03	-8.03e-03	-8.02e-03	-8.15e-03
	-8.18e-03	-8.09e-03	-8.12e-03	-8.15e-03	-8.18e-03	-8.09e-03	-8.12e-03	-8.18e-03	-8.16e-03	-8.11e-03	-8.09e-03
	-8.18e-03	-8.16e-03	-8.11e-03	-8.09e-03	-8.22e-03	-8.23e-03	-8.04e-03	-8.05e-03	-8.23e-03	-8.23e-03	-8.04e-03
	-8.04e-03	-8.22e-03	-8.23e-03	-8.04e-03	-8.05e-03	-8.23e-03	-8.22e-03	-8.05e-03	-8.04e-03	-8.15e-03	-8.17e-03
	-8.10e-03	-8.12e-03	-8.15e-03	-8.17e-03	-8.10e-03	-8.12e-03	-8.17e-03	-8.15e-03	-8.12e-03	-8.10e-03	-8.17e-03
	-8.15e-03	-8.12e-03	-8.10e-03								
2054	-0.01	-0.01	-8.32e-03	-8.34e-03	-0.01	-0.01	-9.13e-03	-9.14e-03	-9.32e-03	-9.33e-03	-9.86e-03
	-9.86e-03	-9.14e-03	-9.14e-03	-9.32e-03	-9.14e-03	-9.78e-03	-9.66e-03	-8.62e-03	-8.50e-03	-9.78e-03	-9.67e-03
	-8.61e-03	-8.51e-03	-0.01	-9.95e-03	-8.33e-03	-8.22e-03	-0.01	-9.95e-03	-8.33e-03	-8.22e-03	-9.50e-03
	-9.13e-03	-9.16e-03	-8.78e-03	-9.59e-03	-9.21e-03	-9.07e-03	-8.69e-03	-9.50e-03	-9.13e-03	-9.15e-03	-8.79e-03
	-9.58e-03	-9.22e-03	-9.06e-03	-8.70e-03	-9.69e-03	-9.60e-03	-8.68e-03	-8.59e-03	-9.68e-03	-9.60e-03	-8.68e-03

	-8.60e-03	-9.99e-03	-9.91e-03	-8.37e-03	-8.29e-03	-9.99e-03	-9.91e-03	-8.37e-03	-8.29e-03	-9.43e-03	-9.15e-03
	-9.13e-03	-8.85e-03	-9.52e-03	-9.25e-03	-9.04e-03	-8.76e-03	-9.43e-03	-9.16e-03	-9.12e-03	-8.86e-03	-9.52e-03
	-9.25e-03	-9.03e-03	-8.76e-03								
2055	-0.01	-0.01	-9.53e-03	-9.56e-03	-0.02	-0.02	-0.01	-0.01	-0.01	-0.01	-0.01
	-0.01	-0.01	-0.01	-0.01	-0.01	-0.01	-0.01	-9.25e-03	-9.33e-03	-0.01	-0.01
	-9.25e-03	-9.33e-03	-0.01	-0.01	-8.97e-03	-9.05e-03	-0.01	-0.01	-8.97e-03	-9.06e-03	-0.01
	-0.01	-9.98e-03	-0.01	-0.01	-0.01	-9.90e-03	-0.01	-0.01	-0.01	-9.97e-03	-0.01
	-0.01	-0.01	-9.89e-03	-0.01	-0.01	-0.01	-9.36e-03	-9.41e-03	-0.01	-0.01	-9.35e-03
	-9.41e-03	-0.01	-0.01	-9.08e-03	-9.14e-03	-0.01	-0.01	-9.08e-03	-9.14e-03	-0.01	-0.01
	-0.01	-0.01	-0.01	-0.01	-9.96e-03	-0.01	-0.01	-0.01	-0.01	-0.01	-0.01
	-0.01	-9.95e-03	-0.01								
2056	-0.02	-0.02	-0.01	-0.01	-0.02	-0.02	-0.01	-0.01	-0.01	-0.01	-0.01
	-0.01	-0.01	-0.01	-0.01	-0.01	-0.02	-0.02	-0.01	-0.01	-0.02	-0.02
	-0.01	-0.01	-0.02	-0.02	-0.01	-0.01	-0.02	-0.02	-0.01	-0.01	-0.01
	-0.01	-0.01	-0.01	-0.01	-0.01	-0.01	-0.01	-0.01	-0.01	-0.01	-0.01
	-0.01	-0.01	-0.01	-0.01	-0.02	-0.02	-0.01	-0.01	-0.02	-0.02	-0.01
	-0.01	-0.02	-0.02	-0.01	-0.01	-0.02	-0.02	-0.01	-0.01	-0.01	-0.01
	-0.01	-0.01	-0.01	-0.01	-0.01	-0.01	-0.01	-0.01	-0.01	-0.01	-0.01
	-0.01	-0.01	-0.01								
2057	-0.01	-0.01	-8.21e-03	-8.23e-03	-0.01	-0.01	-9.02e-03	-9.02e-03	-9.21e-03	-9.22e-03	-9.75e-03
	-9.75e-03	-9.04e-03	-9.04e-03	-9.21e-03	-9.04e-03	-9.52e-03	-9.55e-03	-8.52e-03	-8.55e-03	-9.52e-03	-9.56e-03
	-8.52e-03	-8.55e-03	-9.65e-03	-9.68e-03	-8.39e-03	-8.42e-03	-9.65e-03	-9.68e-03	-8.39e-03	-8.43e-03	-9.14e-03
	-9.23e-03	-8.84e-03	-8.93e-03	-9.18e-03	-9.27e-03	-8.80e-03	-8.89e-03	-9.13e-03	-9.24e-03	-8.83e-03	-8.94e-03
	-9.17e-03	-9.28e-03	-8.79e-03	-8.90e-03	-9.48e-03	-9.50e-03	-8.57e-03	-8.59e-03	-9.48e-03	-9.51e-03	-8.57e-03
	-8.59e-03	-9.61e-03	-9.63e-03	-8.45e-03	-8.47e-03	-9.60e-03	-9.63e-03	-8.44e-03	-8.47e-03	-9.14e-03	-9.21e-03
	-8.86e-03	-8.93e-03	-9.18e-03	-9.24e-03	-8.83e-03	-8.90e-03	-9.13e-03	-9.21e-03	-8.86e-03	-8.94e-03	-9.17e-03
	-9.25e-03	-8.82e-03	-8.90e-03								
2058	-0.02	-0.02	-0.02	-0.02	-0.02	-0.02	-0.02	-0.02	-0.02	-0.02	-0.02
	-0.02	-0.02	-0.02	-0.02	-0.02	-0.02	-0.02	-0.01	-0.01	-0.02	-0.02
	-0.01	-0.01	-0.02	-0.02	-0.01	-0.01	-0.02	-0.02	-0.01	-0.01	-0.02
	-0.02	-0.02	-0.02	-0.02	-0.02	-0.02	-0.02	-0.02	-0.02	-0.02	-0.02
	-0.02	-0.02	-0.02	-0.02	-0.02	-0.02	-0.01	-0.01	-0.02	-0.02	-0.01
	-0.01	-0.02	-0.02	-0.01	-0.01	-0.02	-0.02	-0.01	-0.01	-0.02	-0.02
	-0.02	-0.02	-0.02	-0.02	-0.02	-0.02	-0.02	-0.02	-0.02	-0.02	-0.02
	-0.02	-0.02	-0.02								
2059	-0.01	-0.01	-7.50e-03	-7.51e-03	-0.01	-0.01	-8.34e-03	-8.34e-03	-8.37e-03	-8.37e-03	-8.93e-03
	-8.93e-03	-8.18e-03	-8.18e-03	-8.37e-03	-8.18e-03	-8.41e-03	-8.42e-03	-7.95e-03	-7.96e-03	-8.41e-03	-8.42e-03
	-7.94e-03	-7.96e-03	-8.46e-03	-8.47e-03	-7.89e-03	-7.91e-03	-8.46e-03	-8.47e-03	-7.89e-03	-7.91e-03	-8.23e-03
	-8.27e-03	-8.10e-03	-8.13e-03	-8.25e-03	-8.29e-03	-8.08e-03	-8.12e-03	-8.23e-03	-8.28e-03	-8.09e-03	-8.14e-03
	-8.24e-03	-8.29e-03	-8.07e-03	-8.12e-03	-8.38e-03	-8.39e-03	-7.97e-03	-7.98e-03	-8.38e-03	-8.39e-03	-7.97e-03
	-7.98e-03	-8.44e-03	-8.44e-03	-7.92e-03	-7.93e-03	-8.44e-03	-8.45e-03	-7.92e-03	-7.93e-03	-8.23e-03	-8.26e-03
	-8.11e-03	-8.13e-03	-8.25e-03	-8.27e-03	-8.09e-03	-8.12e-03	-8.23e-03	-8.26e-03	-8.10e-03	-8.14e-03	-8.24e-03
	-8.28e-03	-8.09e-03	-8.12e-03								
2060	-0.01	-0.01	-7.46e-03	-7.46e-03	-0.01	-0.01	-8.29e-03	-8.29e-03	-8.35e-03	-8.36e-03	-8.91e-03
	-8.91e-03	-8.17e-03	-8.17e-03	-8.35e-03	-8.17e-03	-8.31e-03	-8.31e-03	-8.03e-03	-8.03e-03	-8.31e-03	-8.31e-03
	-8.03e-03	-8.03e-03	-8.32e-03	-8.32e-03	-8.01e-03	-8.02e-03	-8.32e-03	-8.32e-03	-8.01e-03	-8.02e-03	-8.20e-03
	-8.22e-03	-8.12e-03	-8.14e-03	-8.21e-03	-8.22e-03	-8.11e-03	-8.13e-03	-8.20e-03	-8.22e-03	-8.12e-03	-8.14e-03
	-8.21e-03	-8.22e-03	-8.11e-03	-8.13e-03	-8.28e-03	-8.29e-03	-8.05e-03	-8.05e-03	-8.28e-03	-8.29e-03	-8.05e-03
	-8.05e-03	-8.30e-03	-8.30e-03	-8.03e-03	-8.04e-03	-8.30e-03	-8.31e-03	-8.03e-03	-8.04e-03	-8.20e-03	-8.21e-03
	-8.13e-03	-8.14e-03	-8.20e-03	-8.22e-03	-8.12e-03	-8.13e-03	-8.20e-03	-8.21e-03	-8.13e-03	-8.14e-03	-8.20e-03
	-8.22e-03	-8.12e-03	-8.13e-03								
2061	-0.01	-0.01	-7.53e-03	-7.54e-03	-0.01	-0.01	-8.35e-03	-8.35e-03	-8.48e-03	-8.48e-03	-9.02e-03
	-9.03e-03	-8.30e-03	-8.30e-03	-8.48e-03	-8.30e-03	-8.42e-03	-8.40e-03	-8.20e-03	-8.18e-03	-8.42e-03	-8.40e-03
	-8.20e-03	-8.18e-03	-8.40e-03	-8.39e-03	-8.21e-03	-8.19e-03	-8.40e-03	-8.39e-03	-8.21e-03	-8.20e-03	-8.36e-03
	-8.30e-03	-8.29e-03	-8.24e-03	-8.36e-03	-8.30e-03	-8.30e-03	-8.24e-03	-8.36e-03	-8.31e-03	-8.29e-03	-8.24e-03
	-8.35e-03	-8.30e-03	-8.29e-03	-8.25e-03	-8.40e-03	-8.38e-03	-8.21e-03	-8.20e-03	-8.39e-03	-8.38e-03	-8.21e-03
	-8.20e-03	-8.39e-03	-8.37e-03	-8.23e-03	-8.21e-03	-8.38e-03	-8.37e-03	-8.22e-03	-8.21e-03	-8.35e-03	-8.31e-03
	-8.29e-03	-8.25e-03	-8.34e-03	-8.30e-03	-8.30e-03	-8.26e-03	-8.34e-03	-8.31e-03	-8.29e-03	-8.25e-03	-8.34e-03

	-8.31e-03	-8.29e-03	-8.26e-03								
2062	-0.01	-0.01	-7.58e-03	-7.58e-03	-0.01	-0.01	-8.39e-03	-8.39e-03	-8.53e-03	-8.54e-03	-9.07e-03
	-9.08e-03	-8.35e-03	-8.35e-03	-8.53e-03	-8.35e-03	-8.49e-03	-8.47e-03	-8.24e-03	-8.21e-03	-8.49e-03	-8.47e-03
	-8.23e-03	-8.21e-03	-8.49e-03	-8.46e-03	-8.24e-03	-8.22e-03	-8.48e-03	-8.46e-03	-8.24e-03	-8.22e-03	-8.43e-03
	-8.35e-03	-8.35e-03	-8.28e-03	-8.43e-03	-8.35e-03	-8.35e-03	-8.28e-03	-8.42e-03	-8.35e-03	-8.35e-03	-8.28e-03
	-8.42e-03	-8.35e-03	-8.35e-03	-8.28e-03	-8.46e-03	-8.45e-03	-8.26e-03	-8.24e-03	-8.46e-03	-8.45e-03	-8.26e-03
	-8.24e-03	-8.47e-03	-8.45e-03	-8.25e-03	-8.24e-03	-8.46e-03	-8.45e-03	-8.25e-03	-8.24e-03	-8.41e-03	-8.35e-03
	-8.35e-03	-8.29e-03	-8.41e-03	-8.36e-03	-8.35e-03	-8.29e-03	-8.41e-03	-8.36e-03	-8.35e-03	-8.29e-03	-8.41e-03
	-8.36e-03	-8.34e-03	-8.29e-03								
2063	-0.01	-0.01	-7.42e-03	-7.43e-03	-0.01	-0.01	-8.26e-03	-8.26e-03	-8.29e-03	-8.29e-03	-8.85e-03
	-8.85e-03	-8.10e-03	-8.10e-03	-8.29e-03	-8.10e-03	-8.28e-03	-8.30e-03	-7.91e-03	-7.93e-03	-8.30e-03	-8.28e-03
	-7.93e-03	-7.91e-03	-8.32e-03	-8.34e-03	-7.86e-03	-7.89e-03	-8.34e-03	-8.32e-03	-7.89e-03	-7.87e-03	-8.12e-03
	-8.19e-03	-8.01e-03	-8.08e-03	-8.14e-03	-8.21e-03	-8.00e-03	-8.07e-03	-8.19e-03	-8.13e-03	-8.08e-03	-8.02e-03
	-8.20e-03	-8.14e-03	-8.07e-03	-8.00e-03	-8.25e-03	-8.26e-03	-7.94e-03	-7.96e-03	-8.26e-03	-8.25e-03	-7.96e-03
	-7.94e-03	-8.31e-03	-8.32e-03	-7.89e-03	-7.90e-03	-8.32e-03	-8.31e-03	-7.90e-03	-7.89e-03	-8.12e-03	-8.18e-03
	-8.03e-03	-8.08e-03	-8.14e-03	-8.19e-03	-8.02e-03	-8.07e-03	-8.17e-03	-8.13e-03	-8.08e-03	-8.03e-03	-8.19e-03
	-8.14e-03	-8.07e-03	-8.02e-03								
2064	-0.01	-0.01	-7.86e-03	-7.87e-03	-0.01	-0.01	-8.67e-03	-8.68e-03	-8.82e-03	-8.82e-03	-9.36e-03
	-9.36e-03	-8.63e-03	-8.64e-03	-8.82e-03	-8.63e-03	-9.01e-03	-8.95e-03	-8.32e-03	-8.26e-03	-9.01e-03	-8.95e-03
	-8.32e-03	-8.26e-03	-9.15e-03	-9.09e-03	-8.18e-03	-8.12e-03	-9.15e-03	-9.09e-03	-8.18e-03	-8.12e-03	-8.84e-03
	-8.63e-03	-8.64e-03	-8.43e-03	-8.88e-03	-8.68e-03	-8.59e-03	-8.39e-03	-8.84e-03	-8.64e-03	-8.63e-03	-8.43e-03
	-8.88e-03	-8.68e-03	-8.59e-03	-8.39e-03	-8.95e-03	-8.90e-03	-8.37e-03	-8.32e-03	-8.95e-03	-8.90e-03	-8.36e-03
	-8.32e-03	-9.11e-03	-9.06e-03	-8.21e-03	-8.16e-03	-9.11e-03	-9.07e-03	-8.20e-03	-8.16e-03	-8.80e-03	-8.65e-03
	-8.62e-03	-8.47e-03	-8.85e-03	-8.70e-03	-8.57e-03	-8.42e-03	-8.80e-03	-8.65e-03	-8.62e-03	-8.47e-03	-8.84e-03
	-8.70e-03	-8.57e-03	-8.43e-03								
2065	-0.01	-0.01	-9.60e-03	-9.64e-03	-0.02	-0.02	-0.01	-0.01	-0.01	-0.01	-0.01
	-0.01	-0.01	-0.01	-0.01	-0.01	-0.01	-0.01	-9.61e-03	-9.36e-03	-0.01	-0.01
	-9.60e-03	-9.37e-03	-0.01	-0.01	-9.03e-03	-8.78e-03	-0.01	-0.01	-9.02e-03	-8.79e-03	-0.01
	-0.01	-0.01	-9.84e-03	-0.01	-0.01	-0.01	-9.67e-03	-0.01	-0.01	-0.01	-9.86e-03
	-0.01	-0.01	-0.01	-9.69e-03	-0.01	-0.01	-9.71e-03	-9.53e-03	-0.01	-0.01	-9.71e-03
	-9.53e-03	-0.01	-0.01	-9.10e-03	-8.92e-03	-0.01	-0.01	-9.09e-03	-8.92e-03	-0.01	-0.01
	-0.01	-9.99e-03	-0.01	-0.01	-0.01	-9.81e-03	-0.01	-0.01	-0.01	-0.01	-0.01
	-0.01	-0.01	-9.82e-03								
2066	-0.02	-0.02	-0.01	-0.01	-0.02	-0.02	-0.01	-0.01	-0.01	-0.01	-0.01
	-0.01	-0.01	-0.01	-0.01	-0.01	-0.02	-0.02	-0.01	-0.01	-0.02	-0.02
	-0.01	-0.01	-0.02	-0.02	-0.01	-9.55e-03	-0.02	-0.02	-0.01	-9.57e-03	-0.01
	-0.01	-0.01	-0.01	-0.02	-0.01	-0.01	-0.01	-0.01	-0.01	-0.01	-0.01
	-0.02	-0.01	-0.01	-0.01	-0.02	-0.02	-0.01	-0.01	-0.02	-0.02	-0.01
	-0.01	-0.02	-0.02	-0.01	-9.83e-03	-0.02	-0.02	-0.01	-9.84e-03	-0.01	-0.01
	-0.01	-0.01	-0.01	-0.01	-0.01	-0.01	-0.01	-0.01	-0.01	-0.01	-0.01
	-0.01	-0.01	-0.01								
2067	-0.03	-0.03	-0.02	-0.02	-0.03	-0.03	-0.02	-0.02	-0.02	-0.02	-0.02
	-0.02	-0.02	-0.02	-0.02	-0.02	-0.03	-0.03	-0.02	-0.02	-0.03	-0.03
	-0.02	-0.02	-0.03	-0.03	-0.01	-0.02	-0.03	-0.03	-0.01	-0.02	-0.02
	-0.02	-0.02	-0.02	-0.02	-0.02	-0.02	-0.02	-0.02	-0.02	-0.02	-0.02
	-0.02	-0.02	-0.02	-0.02	-0.03	-0.03	-0.02	-0.02	-0.03	-0.03	-0.02
	-0.02	-0.03	-0.03	-0.02	-0.02	-0.03	-0.03	-0.02	-0.02	-0.02	-0.02
	-0.02	-0.02	-0.02	-0.02	-0.02	-0.02	-0.02	-0.02	-0.02	-0.02	-0.02
	-0.02	-0.02	-0.02								
2068	-0.03	-0.03	-0.02	-0.02	-0.03	-0.03	-0.02	-0.02	-0.02	-0.02	-0.02
	-0.02	-0.02	-0.02	-0.02	-0.02	-0.02	-0.03	-0.02	-0.02	-0.02	-0.03
	-0.02	-0.02	-0.03	-0.03	-0.02	-0.02	-0.03	-0.03	-0.02	-0.02	-0.02
	-0.02	-0.02	-0.02	-0.02	-0.02	-0.02	-0.02	-0.02	-0.02	-0.02	-0.02
	-0.02	-0.02	-0.02	-0.02	-0.02	-0.02	-0.02	-0.02	-0.02	-0.02	-0.02
	-0.02	-0.03	-0.03	-0.02	-0.02	-0.03	-0.03	-0.02	-0.02	-0.02	-0.02
	-0.02	-0.02	-0.02	-0.02	-0.02	-0.02	-0.02	-0.02	-0.02	-0.02	-0.02
	-0.02	-0.02	-0.02								
2069	-0.03	-0.03	-0.02	-0.02	-0.03	-0.03	-0.02	-0.02	-0.02	-0.02	-0.02

	-0.02	-0.02	-0.02	-0.02	-0.02	-0.02	-0.02	-0.02	-0.02	-0.02	-0.02
	-0.02	-0.02	-0.02	-0.02	-0.02	-0.02	-0.02	-0.02	-0.02	-0.02	-0.02
	-0.02	-0.02	-0.02	-0.02	-0.02	-0.02	-0.02	-0.02	-0.02	-0.02	-0.02
	-0.02	-0.02	-0.02	-0.02	-0.02	-0.02	-0.02	-0.02	-0.02	-0.02	-0.02
	-0.02	-0.02	-0.02	-0.02	-0.02	-0.02	-0.02	-0.02	-0.02	-0.02	-0.02
	-0.02	-0.02	-0.02	-0.02	-0.02	-0.02	-0.02	-0.02	-0.02	-0.02	-0.02
	-0.02	-0.02	-0.02								
2070	-0.03	-0.03	-0.02	-0.02	-0.03	-0.03	-0.02	-0.02	-0.02	-0.02	-0.02
	-0.02	-0.02	-0.02	-0.02	-0.02	-0.02	-0.02	-0.02	-0.02	-0.02	-0.02
	-0.02	-0.02	-0.02	-0.02	-0.02	-0.02	-0.02	-0.02	-0.02	-0.02	-0.02
	-0.02	-0.02	-0.02	-0.02	-0.02	-0.02	-0.02	-0.02	-0.02	-0.02	-0.02
	-0.02	-0.02	-0.02	-0.02	-0.02	-0.02	-0.02	-0.02	-0.02	-0.02	-0.02
	-0.02	-0.02	-0.02	-0.02	-0.02	-0.02	-0.02	-0.02	-0.02	-0.02	-0.02
	-0.02	-0.02	-0.02	-0.02	-0.02	-0.02	-0.02	-0.02	-0.02	-0.02	-0.02
	-0.02	-0.02	-0.02								
2071	-0.03	-0.03	-0.02	-0.02	-0.03	-0.03	-0.02	-0.02	-0.02	-0.02	-0.02
	-0.02	-0.02	-0.02	-0.02	-0.02	-0.02	-0.02	-0.02	-0.02	-0.02	-0.02
	-0.02	-0.02	-0.02	-0.02	-0.02	-0.02	-0.02	-0.02	-0.02	-0.02	-0.02
	-0.02	-0.02	-0.02	-0.02	-0.02	-0.02	-0.02	-0.02	-0.02	-0.02	-0.02
	-0.02	-0.02	-0.02	-0.02	-0.02	-0.02	-0.02	-0.02	-0.02	-0.02	-0.02
	-0.02	-0.02	-0.02	-0.02	-0.02	-0.02	-0.02	-0.02	-0.02	-0.02	-0.02
	-0.02	-0.02	-0.02	-0.02	-0.02	-0.02	-0.02	-0.02	-0.02	-0.02	-0.02
	-0.02	-0.02	-0.02								
2072	-0.03	-0.03	-0.02	-0.02	-0.03	-0.03	-0.02	-0.02	-0.02	-0.02	-0.02
	-0.02	-0.02	-0.02	-0.02	-0.02	-0.02	-0.02	-0.02	-0.02	-0.02	-0.02
	-0.02	-0.02	-0.02	-0.02	-0.02	-0.02	-0.02	-0.02	-0.02	-0.02	-0.02
	-0.02	-0.02	-0.02	-0.02	-0.02	-0.02	-0.02	-0.02	-0.02	-0.02	-0.02
	-0.02	-0.02	-0.02	-0.02	-0.02	-0.02	-0.02	-0.02	-0.02	-0.02	-0.02
	-0.02	-0.02	-0.02	-0.02	-0.02	-0.02	-0.02	-0.02	-0.02	-0.02	-0.02
	-0.02	-0.02	-0.02	-0.02	-0.02	-0.02	-0.02	-0.02	-0.02	-0.02	-0.02
	-0.02	-0.02	-0.02								
2073	-0.03	-0.03	-0.02	-0.02	-0.03	-0.03	-0.02	-0.02	-0.02	-0.02	-0.02
	-0.02	-0.02	-0.02	-0.02	-0.02	-0.02	-0.02	-0.02	-0.02	-0.02	-0.02
	-0.02	-0.02	-0.02	-0.02	-0.02	-0.02	-0.02	-0.02	-0.02	-0.02	-0.02
	-0.02	-0.02	-0.02	-0.02	-0.02	-0.02	-0.02	-0.02	-0.02	-0.02	-0.02
	-0.02	-0.02	-0.02	-0.02	-0.02	-0.02	-0.02	-0.02	-0.02	-0.02	-0.02
	-0.02	-0.02	-0.02	-0.02	-0.02	-0.02	-0.02	-0.02	-0.02	-0.02	-0.02
	-0.02	-0.02	-0.02	-0.02	-0.02	-0.02	-0.02	-0.02	-0.02	-0.02	-0.02
	-0.02	-0.02	-0.02								
2074	-0.02	-0.02	-0.02	-0.02	-0.03	-0.03	-0.02	-0.02	-0.02	-0.02	-0.02
	-0.02	-0.02	-0.02	-0.02	-0.02	-0.02	-0.02	-0.02	-0.02	-0.02	-0.02
	-0.02	-0.02	-0.02	-0.02	-0.02	-0.02	-0.02	-0.02	-0.02	-0.02	-0.02
	-0.02	-0.02	-0.02	-0.02	-0.02	-0.02	-0.02	-0.02	-0.02	-0.02	-0.02
	-0.02	-0.02	-0.02	-0.02	-0.02	-0.02	-0.02	-0.02	-0.02	-0.02	-0.02
	-0.02	-0.02	-0.02	-0.02	-0.02	-0.02	-0.02	-0.02	-0.02	-0.02	-0.02
	-0.02	-0.02	-0.02	-0.02	-0.02	-0.02	-0.02	-0.02	-0.02	-0.02	-0.02
	-0.02	-0.02	-0.02								
2075	-0.03	-0.03	-0.02	-0.02	-0.03	-0.03	-0.02	-0.02	-0.02	-0.02	-0.02
	-0.02	-0.02	-0.02	-0.02	-0.02	-0.02	-0.02	-0.02	-0.02	-0.02	-0.02
	-0.02	-0.02	-0.02	-0.02	-0.02	-0.02	-0.02	-0.02	-0.02	-0.02	-0.02
	-0.02	-0.02	-0.02	-0.02	-0.02	-0.02	-0.02	-0.02	-0.02	-0.02	-0.02
	-0.02	-0.02	-0.02	-0.02	-0.02	-0.02	-0.02	-0.02	-0.02	-0.02	-0.02
	-0.02	-0.02	-0.02	-0.02	-0.02	-0.02	-0.02	-0.02	-0.02	-0.02	-0.02
	-0.02	-0.02	-0.02	-0.02	-0.02	-0.02	-0.02	-0.02	-0.02	-0.02	-0.02
	-0.02	-0.02	-0.02								
2076	-0.02	-0.02	-0.02	-0.02	-0.02	-0.02	-0.02	-0.02	-0.02	-0.02	-0.02
	-0.02	-0.02	-0.02	-0.02	-0.02	-0.02	-0.02	-0.02	-0.02	-0.02	-0.02
	-0.02	-0.02	-0.02	-0.02	-0.02	-0.02	-0.02	-0.02	-0.02	-0.02	-0.02

	-0.02	-0.02	-0.02	-0.02	-0.02	-0.02	-0.02	-0.02	-0.02	-0.02	-0.02
	-0.02	-0.02	-0.02	-0.02	-0.02	-0.02	-0.02	-0.02	-0.02	-0.02	-0.02
	-0.02	-0.02	-0.02	-0.02	-0.02	-0.02	-0.02	-0.02	-0.02	-0.02	-0.02
	-0.02	-0.02	-0.02	-0.02	-0.02	-0.02	-0.02	-0.02	-0.02	-0.02	-0.02
	-0.02	-0.02	-0.02								
2077	-0.03	-0.03	-0.02	-0.02	-0.03	-0.03	-0.02	-0.02	-0.02	-0.02	-0.02
	-0.02	-0.02	-0.02	-0.02	-0.02	-0.02	-0.02	-0.02	-0.02	-0.02	-0.02
	-0.02	-0.02	-0.02	-0.02	-0.02	-0.02	-0.02	-0.02	-0.02	-0.02	-0.02
	-0.02	-0.02	-0.02	-0.02	-0.02	-0.02	-0.02	-0.02	-0.02	-0.02	-0.02
	-0.02	-0.02	-0.02	-0.02	-0.02	-0.02	-0.02	-0.02	-0.02	-0.02	-0.02
	-0.02	-0.02	-0.02	-0.02	-0.02	-0.02	-0.02	-0.02	-0.02	-0.02	-0.02
	-0.02	-0.02	-0.02	-0.02	-0.02	-0.02	-0.02	-0.02	-0.02	-0.02	-0.02
	-0.02	-0.02	-0.02								
2078	-0.02	-0.02	-0.01	-0.01	-0.02	-0.02	-0.02	-0.02	-0.02	-0.02	-0.02
	-0.02	-0.02	-0.02	-0.02	-0.02	-0.02	-0.02	-0.02	-0.02	-0.02	-0.02
	-0.02	-0.02	-0.02	-0.02	-0.02	-0.02	-0.02	-0.02	-0.02	-0.02	-0.02
	-0.02	-0.02	-0.02	-0.02	-0.02	-0.02	-0.02	-0.02	-0.02	-0.02	-0.02
	-0.02	-0.02	-0.02	-0.02	-0.02	-0.02	-0.02	-0.02	-0.02	-0.02	-0.02
	-0.02	-0.02	-0.02	-0.02	-0.02	-0.02	-0.02	-0.02	-0.02	-0.02	-0.02
	-0.02	-0.02	-0.02	-0.02	-0.02	-0.02	-0.02	-0.02	-0.02	-0.02	-0.02
	-0.02	-0.02	-0.02								
2079	-0.03	-0.03	-0.02	-0.02	-0.03	-0.03	-0.02	-0.02	-0.02	-0.02	-0.02
	-0.02	-0.02	-0.02	-0.02	-0.02	-0.02	-0.02	-0.02	-0.02	-0.02	-0.02
	-0.02	-0.02	-0.02	-0.02	-0.02	-0.02	-0.02	-0.02	-0.02	-0.02	-0.02
	-0.02	-0.02	-0.02	-0.02	-0.02	-0.02	-0.02	-0.02	-0.02	-0.02	-0.02
	-0.02	-0.02	-0.02	-0.02	-0.02	-0.02	-0.02	-0.02	-0.02	-0.02	-0.02
	-0.02	-0.02	-0.02	-0.02	-0.02	-0.02	-0.02	-0.02	-0.02	-0.02	-0.02
	-0.02	-0.02	-0.02	-0.02	-0.02	-0.02	-0.02	-0.02	-0.02	-0.02	-0.02
	-0.02	-0.02	-0.02								
2080	-0.02	-0.02	-0.01	-0.01	-0.02	-0.02	-0.01	-0.01	-0.02	-0.02	-0.02
	-0.02	-0.02	-0.02	-0.02	-0.02	-0.02	-0.02	-0.02	-0.02	-0.02	-0.02
	-0.02	-0.02	-0.02	-0.02	-0.02	-0.02	-0.02	-0.02	-0.02	-0.02	-0.02
	-0.02	-0.02	-0.02	-0.02	-0.02	-0.02	-0.02	-0.02	-0.02	-0.02	-0.02
	-0.02	-0.02	-0.02	-0.02	-0.02	-0.02	-0.02	-0.02	-0.02	-0.02	-0.02
	-0.02	-0.02	-0.02	-0.02	-0.02	-0.02	-0.02	-0.02	-0.02	-0.02	-0.02
	-0.02	-0.02	-0.02	-0.02	-0.02	-0.02	-0.02	-0.02	-0.02	-0.02	-0.02
	-0.02	-0.02	-0.02								
2081	-0.03	-0.03	-0.02	-0.02	-0.03	-0.03	-0.02	-0.02	-0.02	-0.02	-0.02
	-0.02	-0.02	-0.02	-0.02	-0.02	-0.02	-0.02	-0.02	-0.02	-0.02	-0.02
	-0.02	-0.02	-0.02	-0.02	-0.02	-0.02	-0.02	-0.02	-0.02	-0.02	-0.02
	-0.02	-0.02	-0.02	-0.02	-0.02	-0.02	-0.02	-0.02	-0.02	-0.02	-0.02
	-0.02	-0.02	-0.02	-0.02	-0.02	-0.02	-0.02	-0.02	-0.02	-0.02	-0.02
	-0.02	-0.02	-0.02	-0.02	-0.02	-0.02	-0.02	-0.02	-0.02	-0.02	-0.02
	-0.02	-0.02	-0.02	-0.02	-0.02	-0.02	-0.02	-0.02	-0.02	-0.02	-0.02
	-0.02	-0.02	-0.02								
2082	-0.02	-0.02	-0.01	-0.01	-0.02	-0.02	-0.01	-0.01	-0.02	-0.02	-0.02
	-0.02	-0.02	-0.02	-0.02	-0.02	-0.02	-0.02	-0.02	-0.02	-0.02	-0.02
	-0.02	-0.02	-0.02	-0.02	-0.02	-0.02	-0.02	-0.02	-0.02	-0.02	-0.02
	-0.02	-0.02	-0.02	-0.02	-0.02	-0.02	-0.02	-0.02	-0.02	-0.02	-0.02
	-0.02	-0.02	-0.02	-0.02	-0.02	-0.02	-0.02	-0.02	-0.02	-0.02	-0.02
	-0.02	-0.02	-0.02	-0.02	-0.02	-0.02	-0.02	-0.02	-0.02	-0.02	-0.02
	-0.02	-0.02	-0.02	-0.02	-0.02	-0.02	-0.02	-0.02	-0.02	-0.02	-0.02
	-0.02	-0.02	-0.02								
2083	-0.03	-0.03	-0.02	-0.02	-0.03	-0.03	-0.02	-0.02	-0.02	-0.02	-0.02
	-0.02	-0.02	-0.02	-0.02	-0.02	-0.02	-0.02	-0.02	-0.02	-0.02	-0.02
	-0.02	-0.02	-0.02	-0.02	-0.02	-0.02	-0.02	-0.02	-0.02	-0.02	-0.02
	-0.02	-0.02	-0.02	-0.02	-0.02	-0.02	-0.02	-0.02	-0.02	-0.02	-0.02
	-0.02	-0.02	-0.02	-0.02	-0.02	-0.02	-0.02	-0.02	-0.02	-0.02	-0.02

	-0.02	-0.02	-0.02	-0.02	-0.02	-0.02	-0.02	-0.02	-0.02	-0.02	-0.02
	-0.02	-0.02	-0.02	-0.02	-0.02	-0.02	-0.02	-0.02	-0.02	-0.02	-0.02
	-0.02	-0.02	-0.02								
2084	-0.02	-0.02	-0.01	-0.01	-0.02	-0.02	-0.01	-0.01	-0.02	-0.02	-0.02
	-0.02	-0.02	-0.02	-0.02	-0.02	-0.02	-0.02	-0.02	-0.02	-0.02	-0.02
	-0.02	-0.02	-0.02	-0.02	-0.02	-0.02	-0.02	-0.02	-0.02	-0.02	-0.02
	-0.02	-0.02	-0.02	-0.02	-0.02	-0.02	-0.02	-0.02	-0.02	-0.02	-0.02
	-0.02	-0.02	-0.02	-0.02	-0.02	-0.02	-0.02	-0.02	-0.02	-0.02	-0.02
	-0.02	-0.02	-0.02	-0.02	-0.02	-0.02	-0.02	-0.02	-0.02	-0.02	-0.02
	-0.02	-0.02	-0.02	-0.02	-0.02	-0.02	-0.02	-0.02	-0.02	-0.02	-0.02
	-0.02	-0.02	-0.02								
2085	-0.03	-0.03	-0.02	-0.02	-0.03	-0.03	-0.02	-0.02	-0.02	-0.02	-0.02
	-0.02	-0.02	-0.02	-0.02	-0.02	-0.02	-0.02	-0.02	-0.02	-0.02	-0.02
	-0.02	-0.02	-0.02	-0.02	-0.02	-0.02	-0.02	-0.02	-0.02	-0.02	-0.02
	-0.02	-0.02	-0.02	-0.02	-0.02	-0.02	-0.02	-0.02	-0.02	-0.02	-0.02
	-0.02	-0.02	-0.02	-0.02	-0.02	-0.02	-0.02	-0.02	-0.02	-0.02	-0.02
	-0.02	-0.02	-0.02	-0.02	-0.02	-0.02	-0.02	-0.02	-0.02	-0.02	-0.02
	-0.02	-0.02	-0.02	-0.02	-0.02	-0.02	-0.02	-0.02	-0.02	-0.02	-0.02
	-0.02	-0.02	-0.02								
2086	-0.02	-0.02	-0.01	-0.01	-0.02	-0.02	-0.01	-0.01	-0.02	-0.02	-0.02
	-0.02	-0.02	-0.02	-0.02	-0.02	-0.02	-0.02	-0.02	-0.02	-0.02	-0.02
	-0.02	-0.02	-0.02	-0.02	-0.02	-0.02	-0.02	-0.02	-0.02	-0.02	-0.02
	-0.02	-0.02	-0.02	-0.02	-0.02	-0.02	-0.02	-0.02	-0.02	-0.02	-0.02
	-0.02	-0.02	-0.02	-0.02	-0.02	-0.02	-0.02	-0.02	-0.02	-0.02	-0.02
	-0.02	-0.02	-0.02	-0.02	-0.02	-0.02	-0.02	-0.02	-0.02	-0.02	-0.02
	-0.02	-0.02	-0.02	-0.02	-0.02	-0.02	-0.02	-0.02	-0.02	-0.02	-0.02
	-0.02	-0.02	-0.02								
2087	-0.03	-0.03	-0.02	-0.02	-0.03	-0.03	-0.02	-0.02	-0.02	-0.02	-0.02
	-0.02	-0.02	-0.02	-0.02	-0.02	-0.02	-0.02	-0.02	-0.02	-0.02	-0.02
	-0.02	-0.02	-0.02	-0.02	-0.02	-0.02	-0.02	-0.02	-0.02	-0.02	-0.02
	-0.02	-0.02	-0.02	-0.02	-0.02	-0.02	-0.02	-0.02	-0.02	-0.02	-0.02
	-0.02	-0.02	-0.02	-0.02	-0.02	-0.02	-0.02	-0.02	-0.02	-0.02	-0.02
	-0.02	-0.02	-0.02	-0.02	-0.02	-0.02	-0.02	-0.02	-0.02	-0.02	-0.02
	-0.02	-0.02	-0.02	-0.02	-0.02	-0.02	-0.02	-0.02	-0.02	-0.02	-0.02
	-0.02	-0.02	-0.02								
2088	-0.02	-0.02	-0.01	-0.01	-0.02	-0.02	-0.01	-0.01	-0.02	-0.02	-0.02
	-0.02	-0.02	-0.02	-0.02	-0.02	-0.02	-0.02	-0.02	-0.02	-0.02	-0.02
	-0.02	-0.02	-0.02	-0.02	-0.02	-0.02	-0.02	-0.02	-0.02	-0.02	-0.02
	-0.02	-0.02	-0.02	-0.02	-0.02	-0.02	-0.02	-0.02	-0.02	-0.02	-0.02
	-0.02	-0.02	-0.02	-0.02	-0.02	-0.02	-0.02	-0.02	-0.02	-0.02	-0.02
	-0.02	-0.02	-0.02	-0.02	-0.02	-0.02	-0.02	-0.02	-0.02	-0.02	-0.02
	-0.02	-0.02	-0.02	-0.02	-0.02	-0.02	-0.02	-0.02	-0.02	-0.02	-0.02
	-0.02	-0.02	-0.02								
2089	-0.03	-0.03	-0.02	-0.02	-0.03	-0.03	-0.02	-0.02	-0.02	-0.02	-0.02
	-0.02	-0.02	-0.02	-0.02	-0.02	-0.02	-0.02	-0.02	-0.02	-0.02	-0.02
	-0.02	-0.02	-0.02	-0.02	-0.02	-0.02	-0.02	-0.02	-0.02	-0.02	-0.02
	-0.02	-0.02	-0.02	-0.02	-0.02	-0.02	-0.02	-0.02	-0.02	-0.02	-0.02
	-0.02	-0.02	-0.02	-0.02	-0.02	-0.02	-0.02	-0.02	-0.02	-0.02	-0.02
	-0.02	-0.02	-0.02	-0.02	-0.02	-0.02	-0.02	-0.02	-0.02	-0.02	-0.02
	-0.02	-0.02	-0.02	-0.02	-0.02	-0.02	-0.02	-0.02	-0.02	-0.02	-0.02
	-0.02	-0.02	-0.02								
2090	-0.02	-0.02	-0.01	-0.01	-0.02	-0.02	-0.01	-0.01	-0.02	-0.02	-0.02
	-0.02	-0.02	-0.02	-0.02	-0.02	-0.02	-0.02	-0.02	-0.02	-0.02	-0.02
	-0.02	-0.02	-0.02	-0.02	-0.02	-0.02	-0.02	-0.02	-0.02	-0.02	-0.02
	-0.02	-0.02	-0.02	-0.02	-0.02	-0.02	-0.02	-0.02	-0.02	-0.02	-0.02
	-0.02	-0.02	-0.02	-0.02	-0.02	-0.02	-0.02	-0.02	-0.02	-0.02	-0.02
	-0.02	-0.02	-0.02	-0.02	-0.02	-0.02	-0.02	-0.02	-0.02	-0.02	-0.02
	-0.02	-0.02	-0.02	-0.02	-0.02	-0.02	-0.02	-0.02	-0.02	-0.02	-0.02

	-0.02	-0.02	-0.02								
2091	-0.03	-0.03	-0.02	-0.02	-0.03	-0.03	-0.02	-0.02	-0.02	-0.02	-0.02
	-0.02	-0.02	-0.02	-0.02	-0.02	-0.02	-0.02	-0.02	-0.02	-0.02	-0.02
	-0.02	-0.02	-0.02	-0.02	-0.02	-0.02	-0.02	-0.02	-0.02	-0.02	-0.02
	-0.02	-0.02	-0.02	-0.02	-0.02	-0.02	-0.02	-0.02	-0.02	-0.02	-0.02
	-0.02	-0.02	-0.02	-0.02	-0.02	-0.02	-0.02	-0.02	-0.02	-0.02	-0.02
	-0.02	-0.02	-0.02	-0.02	-0.02	-0.02	-0.02	-0.02	-0.02	-0.02	-0.02
	-0.02	-0.02	-0.02	-0.02	-0.02	-0.02	-0.02	-0.02	-0.02	-0.02	-0.02
	-0.02	-0.02	-0.02								
2092	-0.02	-0.02	-0.01	-0.01	-0.02	-0.02	-0.01	-0.01	-0.02	-0.02	-0.02
	-0.02	-0.02	-0.02	-0.02	-0.02	-0.02	-0.02	-0.02	-0.02	-0.02	-0.02
	-0.02	-0.02	-0.02	-0.02	-0.02	-0.02	-0.02	-0.02	-0.02	-0.02	-0.02
	-0.02	-0.02	-0.02	-0.02	-0.02	-0.02	-0.02	-0.02	-0.02	-0.02	-0.02
	-0.02	-0.02	-0.02	-0.02	-0.02	-0.02	-0.02	-0.02	-0.02	-0.02	-0.02
	-0.02	-0.02	-0.02	-0.02	-0.02	-0.02	-0.02	-0.02	-0.02	-0.02	-0.02
	-0.02	-0.02	-0.02	-0.02	-0.02	-0.02	-0.02	-0.02	-0.02	-0.02	-0.02
	-0.02	-0.02	-0.02								
2093	-0.03	-0.03	-0.02	-0.02	-0.03	-0.03	-0.02	-0.02	-0.02	-0.02	-0.02
	-0.02	-0.02	-0.02	-0.02	-0.02	-0.02	-0.02	-0.02	-0.02	-0.02	-0.02
	-0.02	-0.02	-0.02	-0.02	-0.02	-0.02	-0.02	-0.02	-0.02	-0.02	-0.02
	-0.02	-0.02	-0.02	-0.02	-0.02	-0.02	-0.02	-0.02	-0.02	-0.02	-0.02
	-0.02	-0.02	-0.02	-0.02	-0.02	-0.02	-0.02	-0.02	-0.02	-0.02	-0.02
	-0.02	-0.02	-0.02	-0.02	-0.02	-0.02	-0.02	-0.02	-0.02	-0.02	-0.02
	-0.02	-0.02	-0.02	-0.02	-0.02	-0.02	-0.02	-0.02	-0.02	-0.02	-0.02
	-0.02	-0.02	-0.02								
2094	-0.02	-0.02	-0.01	-0.01	-0.02	-0.02	-0.01	-0.01	-0.02	-0.02	-0.02
	-0.02	-0.02	-0.02	-0.02	-0.02	-0.02	-0.02	-0.02	-0.02	-0.02	-0.02
	-0.02	-0.02	-0.02	-0.02	-0.02	-0.02	-0.02	-0.02	-0.02	-0.02	-0.02
	-0.02	-0.02	-0.02	-0.02	-0.02	-0.02	-0.02	-0.02	-0.02	-0.02	-0.02
	-0.02	-0.02	-0.02	-0.02	-0.02	-0.02	-0.02	-0.02	-0.02	-0.02	-0.02
	-0.02	-0.02	-0.02	-0.02	-0.02	-0.02	-0.02	-0.02	-0.02	-0.02	-0.02
	-0.02	-0.02	-0.02	-0.02	-0.02	-0.02	-0.02	-0.02	-0.02	-0.02	-0.02
	-0.02	-0.02	-0.02								
2095	-0.03	-0.03	-0.02	-0.02	-0.03	-0.03	-0.02	-0.02	-0.02	-0.02	-0.02
	-0.02	-0.02	-0.02	-0.02	-0.02	-0.02	-0.02	-0.02	-0.02	-0.02	-0.02
	-0.02	-0.02	-0.02	-0.02	-0.02	-0.02	-0.02	-0.02	-0.02	-0.02	-0.02
	-0.02	-0.02	-0.02	-0.02	-0.02	-0.02	-0.02	-0.02	-0.02	-0.02	-0.02
	-0.02	-0.02	-0.02	-0.02	-0.02	-0.02	-0.02	-0.02	-0.02	-0.02	-0.02
	-0.02	-0.02	-0.02	-0.02	-0.02	-0.02	-0.02	-0.02	-0.02	-0.02	-0.02
	-0.02	-0.02	-0.02	-0.02	-0.02	-0.02	-0.02	-0.02	-0.02	-0.02	-0.02
	-0.02	-0.02	-0.02								
2096	-0.02	-0.02	-0.01	-0.01	-0.02	-0.02	-0.01	-0.01	-0.02	-0.02	-0.02
	-0.02	-0.02	-0.02	-0.02	-0.02	-0.02	-0.02	-0.02	-0.02	-0.02	-0.02
	-0.02	-0.02	-0.02	-0.02	-0.02	-0.02	-0.02	-0.02	-0.02	-0.02	-0.02
	-0.02	-0.02	-0.02	-0.02	-0.02	-0.02	-0.02	-0.02	-0.02	-0.02	-0.02
	-0.02	-0.02	-0.02	-0.02	-0.02	-0.02	-0.02	-0.02	-0.02	-0.02	-0.02
	-0.02	-0.02	-0.02	-0.02	-0.02	-0.02	-0.02	-0.02	-0.02	-0.02	-0.02
	-0.02	-0.02	-0.02	-0.02	-0.02	-0.02	-0.02	-0.02	-0.02	-0.02	-0.02
	-0.02	-0.02	-0.02								
2097	-0.03	-0.03	-0.02	-0.02	-0.03	-0.03	-0.02	-0.02	-0.02	-0.02	-0.02
	-0.02	-0.02	-0.02	-0.02	-0.02	-0.02	-0.02	-0.02	-0.02	-0.02	-0.02
	-0.02	-0.02	-0.02	-0.02	-0.02	-0.02	-0.02	-0.02	-0.02	-0.02	-0.02
	-0.02	-0.02	-0.02	-0.02	-0.02	-0.02	-0.02	-0.02	-0.02	-0.02	-0.02
	-0.02	-0.02	-0.02	-0.02	-0.02	-0.02	-0.02	-0.02	-0.02	-0.02	-0.02
	-0.02	-0.02	-0.02	-0.02	-0.02	-0.02	-0.02	-0.02	-0.02	-0.02	-0.02
	-0.02	-0.02	-0.02	-0.02	-0.02	-0.02	-0.02	-0.02	-0.02	-0.02	-0.02
	-0.02	-0.02	-0.02								
2098	-0.02	-0.02	-0.01	-0.01	-0.02	-0.02	-0.01	-0.01	-0.02	-0.02	-0.02

	-0.02	-0.02	-0.02	-0.02	-0.02	-0.02	-0.02	-0.02	-0.02	-0.02	-0.02
	-0.02	-0.02	-0.02	-0.02	-0.02	-0.02	-0.02	-0.02	-0.02	-0.02	-0.02
	-0.02	-0.02	-0.02	-0.02	-0.02	-0.02	-0.02	-0.02	-0.02	-0.02	-0.02
	-0.02	-0.02	-0.02	-0.02	-0.02	-0.02	-0.02	-0.02	-0.02	-0.02	-0.02
	-0.02	-0.02	-0.02	-0.02	-0.02	-0.02	-0.02	-0.02	-0.02	-0.02	-0.02
	-0.02	-0.02	-0.02	-0.02	-0.02	-0.02	-0.02	-0.02	-0.02	-0.02	-0.02
	-0.02	-0.02	-0.02								
					-OMISSIS-						
2238	-0.02	-0.02	-0.02	-0.02	-0.02	-0.02	-0.02	-0.02	-0.02	-0.02	-0.02
	-0.02	-0.02	-0.02	-0.02	-0.02	-0.02	-0.02	-0.01	-0.02	-0.02	-0.02
	-0.01	-0.02	-0.02	-0.02	-0.01	-0.02	-0.02	-0.02	-0.01	-0.02	-0.02
	-0.02	-0.01	-0.02	-0.02	-0.02	-0.01	-0.02	-0.02	-0.02	-0.01	-0.02
	-0.02	-0.02	-0.01	-0.02	-0.02	-0.02	-0.01	-0.02	-0.02	-0.02	-0.01
	-0.02	-0.02	-0.02	-0.02	-0.02	-0.02	-0.02	-0.02	-0.02	-0.02	-0.02
	-0.01	-0.02	-0.02	-0.02	-0.01	-0.02	-0.02	-0.02	-0.01	-0.02	-0.02
	-0.02	-0.01	-0.02								
2239	-0.03	-0.03	-0.02	-0.02	-0.03	-0.03	-0.02	-0.02	-0.02	-0.02	-0.02
	-0.02	-0.02	-0.02	-0.02	-0.02	-0.02	-0.03	-0.02	-0.02	-0.02	-0.03
	-0.02	-0.02	-0.02	-0.02	-0.02	-0.02	-0.02	-0.02	-0.02	-0.02	-0.02
	-0.03	-0.02	-0.02	-0.02	-0.02	-0.02	-0.02	-0.02	-0.02	-0.02	-0.02
	-0.02	-0.02	-0.02	-0.02	-0.02	-0.02	-0.02	-0.02	-0.02	-0.02	-0.02
	-0.02	-0.02	-0.02	-0.02	-0.02	-0.02	-0.02	-0.02	-0.02	-0.02	-0.02
	-0.02	-0.02	-0.02	-0.02	-0.02	-0.02	-0.02	-0.02	-0.02	-0.02	-0.02
	-0.02	-0.02	-0.02								
2240	-0.03	-0.03	-0.02	-0.02	-0.03	-0.03	-0.02	-0.02	-0.02	-0.02	-0.02
	-0.02	-0.02	-0.02	-0.02	-0.02	-0.02	-0.02	-0.02	-0.02	-0.02	-0.02
	-0.02	-0.02	-0.02	-0.02	-0.02	-0.02	-0.02	-0.02	-0.02	-0.02	-0.02
	-0.02	-0.02	-0.02	-0.02	-0.02	-0.02	-0.02	-0.02	-0.02	-0.02	-0.02
	-0.02	-0.02	-0.02	-0.02	-0.02	-0.02	-0.02	-0.02	-0.02	-0.02	-0.02
	-0.02	-0.02	-0.02	-0.02	-0.02	-0.02	-0.02	-0.02	-0.02	-0.02	-0.02
	-0.02	-0.02	-0.02	-0.02	-0.02	-0.02	-0.02	-0.02	-0.02	-0.02	-0.02
	-0.02	-0.02	-0.02								
2241	-0.03	-0.03	-0.02	-0.02	-0.03	-0.03	-0.02	-0.02	-0.02	-0.02	-0.02
	-0.02	-0.02	-0.02	-0.02	-0.02	-0.02	-0.03	-0.02	-0.02	-0.02	-0.03
	-0.02	-0.02	-0.02	-0.02	-0.02	-0.02	-0.02	-0.02	-0.02	-0.02	-0.02
	-0.02	-0.02	-0.02	-0.02	-0.02	-0.02	-0.02	-0.02	-0.02	-0.02	-0.02
	-0.02	-0.02	-0.02	-0.02	-0.02	-0.03	-0.02	-0.02	-0.02	-0.02	-0.02
	-0.02	-0.02	-0.02	-0.02	-0.02	-0.02	-0.02	-0.02	-0.02	-0.02	-0.02
	-0.02	-0.02	-0.02	-0.02	-0.02	-0.02	-0.02	-0.02	-0.02	-0.02	-0.02
	-0.02	-0.02	-0.02								
2242	-0.03	-0.03	-0.02	-0.02	-0.03	-0.03	-0.02	-0.02	-0.02	-0.02	-0.02
	-0.02	-0.02	-0.02	-0.02	-0.02	-0.02	-0.02	-0.02	-0.02	-0.02	-0.02
	-0.02	-0.02	-0.02	-0.02	-0.02	-0.02	-0.02	-0.02	-0.02	-0.02	-0.02
	-0.02	-0.02	-0.02	-0.02	-0.02	-0.02	-0.02	-0.02	-0.02	-0.02	-0.02
	-0.02	-0.02	-0.02	-0.02	-0.02	-0.02	-0.02	-0.02	-0.02	-0.02	-0.02
	-0.02	-0.02	-0.02	-0.02	-0.02	-0.02	-0.02	-0.02	-0.02	-0.02	-0.02
	-0.02	-0.02	-0.02	-0.02	-0.02	-0.02	-0.02	-0.02	-0.02	-0.02	-0.02
	-0.02	-0.02	-0.02								
2243	-0.03	-0.03	-0.02	-0.02	-0.03	-0.03	-0.02	-0.02	-0.02	-0.02	-0.02
	-0.02	-0.02	-0.02	-0.02	-0.02	-0.03	-0.03	-0.01	-0.02	-0.03	-0.03
	-0.01	-0.02	-0.02	-0.03	-0.02	-0.02	-0.02	-0.03	-0.02	-0.02	-0.02
	-0.03	-0.02	-0.02	-0.02	-0.03	-0.02	-0.02	-0.02	-0.03	-0.02	-0.02
	-0.02	-0.03	-0.02	-0.02	-0.03	-0.03	-0.02	-0.02	-0.03	-0.03	-0.02
	-0.02	-0.02	-0.03	-0.02	-0.02	-0.02	-0.03	-0.02	-0.02	-0.02	-0.03
	-0.02	-0.02	-0.02	-0.02	-0.02	-0.02	-0.02	-0.03	-0.02	-0.02	-0.02
	-0.02	-0.02	-0.02								
2244	-0.03	-0.03	-0.02	-0.02	-0.03	-0.03	-0.02	-0.02	-0.02	-0.02	-0.02
	-0.02	-0.02	-0.02	-0.02	-0.02	-0.03	-0.03	-0.02	-0.02	-0.03	-0.03

	-0.02	-0.02	-0.02	-0.03	-0.02	-0.02	-0.02	-0.03	-0.02	-0.02	-0.02
	-0.03	-0.02	-0.02	-0.02	-0.03	-0.02	-0.02	-0.02	-0.03	-0.02	-0.02
	-0.02	-0.03	-0.02	-0.02	-0.03	-0.03	-0.02	-0.02	-0.03	-0.03	-0.02
	-0.02	-0.02	-0.03	-0.02	-0.02	-0.02	-0.03	-0.02	-0.02	-0.02	-0.03
	-0.02	-0.02	-0.02	-0.02	-0.02	-0.02	-0.02	-0.03	-0.02	-0.02	-0.02
	-0.02	-0.02	-0.02								
2245	-0.03	-0.03	-0.02	-0.02	-0.03	-0.03	-0.02	-0.02	-0.02	-0.02	-0.02
	-0.02	-0.02	-0.02	-0.02	-0.02	-0.03	-0.03	-0.01	-0.01	-0.03	-0.03
	-0.01	-0.01	-0.02	-0.03	-0.02	-0.02	-0.02	-0.03	-0.02	-0.02	-0.02
	-0.03	-0.02	-0.02	-0.02	-0.02	-0.02	-0.02	-0.02	-0.03	-0.02	-0.02
	-0.02	-0.02	-0.02	-0.02	-0.03	-0.03	-0.01	-0.01	-0.03	-0.03	-0.01
	-0.01	-0.02	-0.03	-0.02	-0.02	-0.02	-0.03	-0.02	-0.02	-0.02	-0.02
	-0.02	-0.02	-0.02	-0.02	-0.02	-0.02	-0.02	-0.02	-0.02	-0.02	-0.02
	-0.02	-0.02	-0.02								
2246	-0.03	-0.03	-0.02	-0.02	-0.03	-0.03	-0.02	-0.02	-0.02	-0.02	-0.02
	-0.02	-0.02	-0.02	-0.02	-0.02	-0.03	-0.03	-0.02	-0.02	-0.03	-0.03
	-0.02	-0.02	-0.02	-0.02	-0.02	-0.02	-0.02	-0.02	-0.02	-0.02	-0.02
	-0.03	-0.02	-0.02	-0.02	-0.03	-0.02	-0.02	-0.02	-0.03	-0.02	-0.02
	-0.02	-0.03	-0.02	-0.02	-0.03	-0.03	-0.02	-0.02	-0.03	-0.03	-0.02
	-0.02	-0.02	-0.02	-0.02	-0.02	-0.02	-0.02	-0.02	-0.02	-0.02	-0.02
	-0.02	-0.02	-0.02	-0.02	-0.02	-0.02	-0.02	-0.02	-0.02	-0.02	-0.02
	-0.02	-0.02	-0.02								

Nodo (G)	**Pt 1/12**	**Pt 2/13**	**Pt 3...**	**Pt 4...**
	-0.04			
	-4.30e-03			

16. VERIFICA ELEMENTI PARETE E GUSCIO IN C.A.

Per le pareti in c.a. progettate in ottemperanza al cap. 7 del DM 14-01-08 vengono riportate 4 tabelle. In particolare per ogni parete si riportano:
una tabella riassuntiva della geometria e dello stato di verifica per compressione assiale, pressoflessione e taglio; per le estese debolmente armate anche lo stato di verifica relativo alla snellezza.
una tabella nella quale, per ogni quota significativa, si riporta l'armatura verticale di base e della zona confinata, eventuale armatura concentrata all'estremita per le estese debolmente armate, l'armatura orizzontale, l'esito delle 5 verifiche condotte, lo sforzo assiale aggiuntivo per q superiore a 2 e i valori di inviluppo di taglio e momento
una tabella nella quale, per ogni quota significativa, si riportano le azioni che hanno reso massimo il valore delle 5 verifiche condotte (in particolare le verifiche a taglio sono influenzate dal valore dello sforzo assiale e del momento). Le azioni derivate dall'analisi, in ogni combinazione di calcolo, sono elaborate come previsto al punto 7.4.4.5.1: traslazione del momento, incremento e variazione diagramma taglio, incremento e decremento sforzo assiale
una tabella riassuntiva dei parametri utilizzati per le verifiche a taglio per ogni quota significativa.

Tabella 1	
H totale	*Altezza complessiva della parete*
Spessore	*Spessore della parete*
H critica	*Altezza come da punto 7.4.4.5.1 per traslazione momento*
H critica V	*Altezza come da punto 7.4.6.1.4 per la definizione della zona critica e zona confinata*
L totale	*Larghezza di base della parete*
L confinata	*Larghezza della zona confinata*
Verif. N	*Verifica di cui al punto 7.4.4.5.2.1 compressione semplice*
Verif. N-M	*Verifica di cui al punto 7.4.4.5.2.1 pressoflessione*
Verif. Snellezza	*Verifica di cui al punto 7.4.4.5.2.1 limitazione compressione per prevenire l'instabilità*
Fattore V	*Fattore di amplificazione del taglio di cui al punto 7.4.4.5.1*
Diagramma V	*Diagramma elaborato per effetto modi superiori come da fig. 7.4.2*
Verif. V	*Verifica di cui al punto 7.4.4.5.2.2 taglio (compressione cls, trazione acciaio, scorrimento in zona critica)*
Tabella 2	
Af conf.	*Numero e diametro armatura presente in una zona confinata*
Af std	*Diametro e passo armatura in zona non confinata (doppia maglia)*
Af estremi	*Diametro dei ferri di estremità del pannello; se posto uguale 0, viene utilizzato il diametro standard*
Af V (ori)	*Diametro e passo armatura orizzontale (doppia maglia)*
Ver. N	*Rapporto tra azione di calcolo e resistenza a compressione (normalizzato a 1 in quanto da confrontare con 40% in CDB e 35 % in CDA)*
Ver. N/M	*Rapporto tra azione di calcolo e resistenza a pressoflessione*
Ver. Snell.	*Rapporto tra la snellezza dell'elemento e la snellezza lim. come da formula 4.1.33*
Ver. V cls	*Rapporto tra azione di calcolo e resistenza a taglio-compressione*
Ver. V acc	*Rapporto tra azione di calcolo e resistenza a taglio-trazione*
Ver. V scorr.	*Rapporto tra azione di calcolo e resistenza a taglio scorrimento*
N add	*Sforzo assiale di cui al punto 7.4.4.5.1 da sommare e sottrarre nelle verifiche quando q supera 2*
M invil	*Inviluppo del momento come al punto 7.4.4.5.1 (informativo)*
V invil	*Inviluppo del taglio come al punto 7.4.4.5.1 (informativo)*
Tabella 3	
N v.N	*Valore dello sforzo assiale per cui Ver. N attinge il massimo valore*
N v.M/N, M v.M/N	*Valore dello sforzo assiale e momento per cui Ver. N/M attinge il massimo valore*
N v.M/N, M v.M/N Mo v.M/N	*Valore dello sforzo assiale e dei momenti per cui Ver. N/M attinge il massimo valore (per le pareti estese debolmente armate)*
N v.Vcls, V v.Vcls,	*Valore dello sforzo assiale e taglio per cui Ver. V. cls attinge il massimo valore*
N v.Vacc, M v.Vacc, V v.Vacc,	*Valore dello sforzo assiale, momento e taglio per cui Ver. V. acc attinge il massimo valore*
N v.Vscorr, M v.Vscorr, V v.Vscorr,	*Valore dello sforzo assiale, momento e taglio per cui Ver. V. scorr.e*
Tabella 4	

CtgT Vcls	*Valore di ctg(teta) adottato nella verifica V compressione cls*
Vrsd Vcls	*Valore della resistenza a taglio trazione (armatura di calcolo)*
Vrcd Vcls	*Valore della resistenza a taglio compressione*
CtgT Vacc	*Valore di ctg(teta) adottato nella verifica V trazione armatura*
Vrsd Vacc	*Valore della resistenza a taglio trazione (armatura presente)*
Vrcd Vacc	*Valore della resistenza a taglio compressione*
Vdd	*Valore del contributo alla resistenza allo scorrimento come da [7.4.19]*
Vid	*Valore del contributo alla resistenza allo scorrimento come da [7.4.20]*
Vfd	*Valore del contributo alla resistenza allo scorrimento come da [7.4.21]*

Nel caso dei gusci e nel caso in cui la progettazione della parete sia integrata o effettuata del tutto con progettazione locale si produce una tabella nella quale vengono riportati per ogni macroelemento il numero dello stesso ed il codice di verifica.
Per la progettazione con il metodo degli stati limite vengono riportati il rapporto x/d, la verifica per sollecitazioni ultime e la verifica per compressione media con l'indicazione delle due combinazioni in cui si sono attinti i rispettivi valori.
Nel caso in cui si sia proceduto alla progettazione con le tensioni ammissibili vengono riportate le massime tensioni nell'elemento (massima compressione nel calcestruzzo, massima compressione media nel calcestruzzo, massima tensione nell'acciaio) con l'indicazione delle combinazioni in cui si sono attinti i rispettivi valori.
Per ogni elemento viene riportata inoltre la maglia di armatura necessaria in relazione alle risultanze della progettazione dei nodi dell'elemento stesso (diametri in mm, passi in cm). Le quantità di armature necessarie
sono armature (disposte rispettivamente in direzione principale e secondaria, inferiore e superiore) distribuite nell'elemento ed espresse in centimetri quadri per sviluppo lineare pari ad un metro.

In particolare i simboli utilizzati assumono il seguente significato:

M_S		*macroelemento di tipo setto (elementi verticali contigui ed analoghi per proprietà)*
M_G		*macroelemento di tipo guscio (elementi non verticali contigui ed analoghi per proprietà)*
Stato		*codice di verifica dell'elemento*
Nodo		*numero del nodo*
x/d		*rapporto tra posizione dell'asse neutro e altezza utile alla rottura della sezione (per sola flessione)*
verif.		*rapporto Sd/Su con sollecitazioni ultime: valore minore o uguale a 1 per verifica positiva*
Ver.rd		*rapporto Nd/Nu (Nu ottenuto con riduzione del 25% di fcd): valore minore o uguale a 1 per verifica positiva*
Rete pr		*maglia di armatura (diametro/passo) in direzione principale inferiore e superiore*
Rete sec		*maglia di armatura (diametro/passo) in direzione secondaria inferiore e superiore*
Aggiuntivi		*relativa armatura aggiuntiva (diametro/passo) inferiore (i) e superiore (s) eventualmente differenziate*
sc max		*massima tensione di compressione del calcestruzzo*
sc med		*massima tensione media di compressione del calcestruzzo*
sf max		*massima tensione dell'acciaio*
Rif. cmb		*combinazioni di carico in cui si verificano i valori riportati*
Af pr-		*quantità di armatura richiesta in direzione principale relativa alla faccia negativa (intradosso piastre) (valore derivante da calcolo o minimo normativo)*
Af pr+		*quantità di armatura richiesta in direzione principale relativa alla faccia positiva (estradosso piastre) (valore derivante da calcolo o minimo normativo)*
Af sec-	*Af sec+*	*valori analoghi a quelli soprariportati ma relativi alla armatura secondaria*
N	*M*	*azioni membranali e flessionali (in direzione dell'armatura principale e secondaria) estratte, poiché rappresentative, tra quelle utilizzate per il progetto e la verifica*

Progettazione delle fondazioni

Il D.M.14/02/2008 - par: 7.2.5 prevede:
"Per le strutture progettate sia per CD "A" sia per CD "B" il dimensionamento delle strutture di fondazione e la verifica di sicurezza del complesso fondazione-terreno devono essere eseguiti assumendo come azioni in fondazione le resistenze degli elementi strutturali soprastanti [...] si richiede tuttavia che tali azioni risultino non maggiori di quelle trasferite dagli elementi soprastanti, amplificate con un γRd pari a 1,1 in CD "B" e 1,3 in CD "A" e comunque non maggiori di quelle derivanti da una analisi elastica della struttura in elevazione eseguita con un fattore di struttura q pari a 1...."

Nel contesto visualizzazione risultati e nella stampa della relazione sulle fondazioni PRO_SAP mostra le sollecitazioni che derivano dall'analisi non incrementate sia in termini di pressioni sul terreno che in termini di sollecitazioni.

La progettazione degli elementi strutturali con proprietà fondazione è effettuata da PRO_SAP (per travi e platee) o da PRO_CAD Plinti (per plinti e pali di fondazione) incrementando le sollecitazioni delle combinazioni con sisma del fattore: γrd= 1.1 in CDB γrd=1.3 in CDA per pali, plinti, travi e platee.
Per i bicchieri dei plinti di fondazione prefabbricati l'incremento delle sollecitazioni ha un fattore: γrd= 1.2 in CDB γrd=1.35 in CDA.
N.B.: se il fattore di struttura q è =1 la progettazione viene effettuata senza nessun incremento.

Le verifiche geotecniche vengono effettuate dal modulo geotecnico incrementando automaticamente le sollecitazioni del fattore: γrd= 1.1 in CDB γrd=1.3 in CDA per pali, plinti, travi e platee.
N.B.: se il fattore di struttura q è =1 le verifiche geotecniche vengono effettuate senza nessun incremento.

M_S	Nodo	x/d	verif.	ver. rid	Af pr-	Af pr+	Af sec-	Af sec+	N z	N o	N zo	M z	M o	M zo
									kN/ m	kN/ m	kN/ m	kN	kN	kN
1	ok 1	0.18	1.25e-02	9.06e-03	7.5	7.5	5.2	5.2	-12.0	-8.7	16.5	5.82e-02	-3.18e-02	5.1
1	ok 2	0.18	2.38e-02	1.01e-02	7.5	7.5	5.2	5.2	-16.6	-16.8	13.2	2.77e-02	-0.3	-2.8
1	ok 3	0.18	2.35e-02	7.16e-03	7.5	7.5	5.2	5.2	-4.6	-14.3	9.1	0.3	-0.2	5.9
1	ok 4	0.18	2.74e-02	5.78e-03	7.5	7.5	5.2	5.2	11.0	1.9	-8.0	0.3	7.99e-03	11.9
1	ok 5	0.18	3.35e-02	4.60e-03	7.5	7.5	5.2	5.2	-9.8	0.8	7.7	-5.09e-02	-0.3	-0.9
1	ok 6	0.18	3.34e-02	5.91e-03	7.5	7.5	5.2	5.2	-10.7	-1.0	6.7	-3.66e-02	-0.3	-2.6
1	ok 7	0.18	3.27e-02	1.07e-02	7.5	7.5	5.2	5.2	-24.1	-2.3	-15.7	2.93e-04	3.26e-04	1.75e-02
1	ok 8	0.18	3.45e-02	1.14e-02	7.5	7.5	5.2	5.2	-24.9	-6.0	-16.3	9.74e-04	2.54e-04	9.85e-03
1	ok 9	0.18	1.73e-02	8.77e-03	7.5	7.5	5.2	5.2	-21.6	0.7	-11.6	3.42e-05	3.14e-04	7.29e-03
1	ok 10	0.18	3.78e-02	1.35e-02	7.5	7.5	5.2	5.2	-38.5	-2.2	-10.4	3.09e-04	4.05e-05	7.81e-03
1	ok 11	0.18	3.88e-02	1.47e-02	7.5	7.5	5.2	5.2	-38.3	-10.2	-13.3	-3.62e-05	-1.72e-05	-2.70e-02
1	ok 12	0.18	2.47e-02	1.13e-02	7.5	7.5	5.2	5.2	-30.5	1.5	-10.6	9.56e-05	1.06e-04	9.01e-03
1	ok 13	0.18	4.18e-02	1.59e-02	7.5	7.5	5.2	5.2	-47.5	-2.8	-7.1	1.12e-04	-1.16e-04	3.42e-03
1	ok 14	0.18	4.20e-02	1.70e-02	7.5	7.5	5.2	5.2	-50.4	-11.0	-7.8	-5.26e-04	-1.63e-04	-3.66e-03
1	ok 15	0.18	2.90e-02	1.38e-02	7.5	7.5	5.2	5.2	-41.8	1.9	-4.3	1.77e-04	-5.84e-05	8.91e-03
1	ok 16	0.18	4.42e-02	1.72e-02	7.5	7.5	5.2	5.2	-52.1	-3.8	5.3	6.22e-05	-9.45e-05	8.30e-03
1	ok 17	0.18	4.37e-02	1.81e-02	7.5	7.5	5.2	5.2	-54.0	-11.7	7.7	-2.02e-04	-6.67e-05	1.43e-02
1	ok 18	0.18	3.19e-02	1.53e-02	7.5	7.5	5.2	5.2	-46.7	1.5	-2.0	1.51e-04	-7.54e-05	5.25e-03
1	ok 19	0.18	4.55e-02	1.79e-02	7.5	7.5	5.2	5.2	-53.6	-4.8	7.2	1.89e-04	1.91e-05	1.23e-02
1	ok 20	0.18	4.48e-02	1.86e-02	7.5	7.5	5.2	5.2	-54.8	-11.5	9.2	2.72e-04	5.50e-05	1.84e-02
1	ok 21	0.18	3.35e-02	1.61e-02	7.5	7.5	5.2	5.2	-49.1	0.6	3.1	1.48e-04	-9.23e-06	4.63e-03
1	ok 22	0.18	4.59e-02	1.80e-02	7.5	7.5	5.2	5.2	-53.6	-5.5	8.3	3.39e-04	1.21e-04	1.26e-02
1	ok 23	0.18	4.50e-02	1.85e-02	7.5	7.5	5.2	5.2	-54.2	-10.9	10.0	6.64e-04	1.52e-04	1.51e-02
1	ok 24	0.18	3.42e-02	1.64e-02	7.5	7.5	5.2	5.2	-49.7	-0.4	4.3	1.64e-04	7.93e-05	5.97e-03
1	ok 25	0.18	4.55e-02	1.78e-02	7.5	7.5	5.2	5.2	-52.8	-5.9	8.8	4.25e-04	1.77e-04	9.35e-03
1	ok 26	0.18	4.49e-02	1.82e-02	7.5	7.5	5.2	5.2	-53.0	-10.2	10.4	8.54e-04	1.98e-04	7.63e-03
1	ok 27	0.18	3.46e-02	1.64e-02	7.5	7.5	5.2	5.2	-49.5	-1.4	5.0	1.70e-04	1.37e-04	7.59e-03
1	ok 28	0.18	4.51e-02	1.75e-02	7.5	7.5	5.2	5.2	-51.9	-6.1	8.8	4.07e-04	1.81e-04	4.10e-03
1	ok 29	0.18	4.47e-02	1.78e-02	7.5	7.5	5.2	5.2	-51.8	-9.5	10.4	8.29e-04	1.93e-04	-1.95e-03
1	ok 30	0.18	3.45e-02	1.62e-02	7.5	7.5	5.2	5.2	-48.9	-2.2	5.2	1.43e-04	1.49e-04	8.72e-03
1	ok 31	0.18	4.46e-02	1.73e-02	7.5	7.5	5.2	5.2	-51.1	-6.3	8.6	2.97e-04	1.40e-04	-1.52e-03
1	ok 32	0.18	4.43e-02	1.74e-02	7.5	7.5	5.2	5.2	-50.8	-8.9	10.3	6.28e-04	1.48e-04	-1.01e-02
1	ok 33	0.18	3.41e-02	1.60e-02	7.5	7.5	5.2	5.2	-48.3	-2.8	5.1	7.58e-05	1.19e-04	9.21e-03
1	ok 34	0.18	4.41e-02	1.71e-02	7.5	7.5	5.2	5.2	-50.6	-6.3	8.3	1.14e-04	7.04e-05	-5.63e-03
1	ok 35	0.18	4.39e-02	1.72e-02	7.5	7.5	5.2	5.2	-50.2	-8.5	10.0	3.05e-04	7.48e-05	-1.54e-02
1	ok 36	0.18	3.36e-02	1.58e-02	7.5	7.5	5.2	5.2	-47.9	-3.3	4.9	-2.71e-05	5.82e-05	9.24e-03
1	ok 37	0.18	4.35e-02	1.69e-02	7.5	7.5	5.2	5.2	-50.4	-6.4	7.9	-1.09e-04	-1.23e-05	-7.44e-03
1	ok 38	0.18	4.35e-02	1.71e-02	7.5	7.5	5.2	5.2	-50.0	-8.2	9.7	-7.01e-05	-9.16e-06	-1.72e-02
1	ok 39	0.18	3.32e-02	1.58e-02	7.5	7.5	5.2	5.2	-47.7	-3.6	4.6	-1.53e-04	-1.70e-05	9.11e-03
1	ok 40	0.18	4.30e-02	1.69e-02	7.5	7.5	5.2	5.2	-50.5	-6.4	7.5	-3.36e-04	-9.36e-05	-6.67e-03
1	ok 41	0.18	4.30e-02	1.71e-02	7.5	7.5	5.2	5.2	-50.1	-8.1	9.3	-4.43e-04	-9.25e-05	-1.58e-02
1	ok 42	0.18	3.27e-02	1.58e-02	7.5	7.5	5.2	5.2	-47.9	-3.8	4.2	-2.84e-04	-9.23e-05	9.05e-03
1	ok 43	0.18	4.26e-02	1.71e-02	7.5	7.5	5.2	5.2	-51.0	-6.5	7.1	-5.34e-04	-1.60e-04	-3.77e-03

1	ok 44	0.18	4.25e-02	1.72e-02	7.5	7.5	5.2	5.2	-50.7	-8.2	9.0	-7.38e-04	-1.56e-04	-1.12e-02
1	ok 45	0.18	3.23e-02	1.59e-02	7.5	7.5	5.2	5.2	-48.3	-3.9	3.9	-4.04e-04	-1.56e-04	9.28e-03
1	ok 46	0.18	4.21e-02	1.73e-02	7.5	7.5	5.2	5.2	-51.9	-6.4	6.8	-6.85e-04	-2.05e-04	1.13e-03
1	ok 47	0.18	4.19e-02	1.75e-02	7.5	7.5	5.2	5.2	-51.6	-8.4	8.7	-9.64e-04	-2.05e-04	-5.02e-03
1	ok 48	0.18	3.18e-02	1.61e-02	7.5	7.5	5.2	5.2	-49.1	-3.8	3.7	-5.03e-04	-2.00e-04	9.96e-03
1	ok 49	0.18	4.15e-02	1.77e-02	7.5	7.5	5.2	5.2	-53.1	-6.3	6.6	-7.91e-04	-2.29e-04	6.70e-03
1	ok 50	0.18	4.13e-02	1.79e-02	7.5	7.5	5.2	5.2	-53.0	-8.7	8.5	-1.07e-03	-2.25e-04	6.33e-04
1	ok 51	0.18	3.11e-02	1.65e-02	7.5	7.5	5.2	5.2	-50.0	-3.4	3.7	-5.72e-04	-2.27e-04	1.13e-02
1	ok 52	0.18	4.09e-02	1.81e-02	7.5	7.5	5.2	5.2	-54.3	-6.0	6.7	-8.40e-04	-2.37e-04	1.29e-02
1	ok 53	0.18	4.05e-02	1.84e-02	7.5	7.5	5.2	5.2	-54.5	-9.1	8.6	-1.11e-03	-2.29e-04	6.40e-03
1	ok 54	0.18	3.03e-02	1.68e-02	7.5	7.5	5.2	5.2	-51.0	-2.8	4.1	-6.06e-04	-2.42e-04	1.34e-02
1	ok 55	0.18	4.02e-02	1.85e-02	7.5	7.5	5.2	5.2	-55.5	-5.5	7.1	-8.57e-04	-2.43e-04	1.99e-02
1	ok 56	0.18	3.96e-02	1.89e-02	7.5	7.5	5.2	5.2	-56.1	-9.6	8.9	-1.12e-03	-2.31e-04	1.09e-02
1	ok 57	0.18	2.90e-02	1.70e-02	7.5	7.5	5.2	5.2	-51.6	-1.9	4.8	-6.01e-04	-2.52e-04	1.61e-02
1	ok 58	0.18	3.88e-02	1.87e-02	7.5	7.5	5.2	5.2	-55.9	-4.5	8.2	-8.33e-04	-2.57e-04	2.80e-02
1	ok 59	0.18	3.84e-02	1.93e-02	7.5	7.5	5.2	5.2	-57.1	-9.9	9.6	-1.17e-03	-2.45e-04	1.63e-02
1	ok 60	0.18	2.71e-02	1.71e-02	7.5	7.5	5.2	5.2	-51.4	-0.7	6.2	-5.48e-04	-2.61e-04	1.88e-02
1	ok 61	0.18	3.66e-02	1.85e-02	7.5	7.5	5.2	5.2	-54.8	-3.2	9.9	-7.38e-04	-2.72e-04	3.73e-02
1	ok 62	0.18	3.65e-02	1.93e-02	7.5	7.5	5.2	5.2	-56.6	-9.7	10.9	-1.26e-03	-2.77e-04	2.48e-02
1	ok 63	0.18	2.50e-02	1.67e-02	7.5	7.5	5.2	5.2	-49.7	0.6	8.0	-4.37e-04	-2.49e-04	1.97e-02
1	ok 64	0.18	3.29e-02	1.77e-02	7.5	7.5	5.2	5.2	-51.0	-1.6	12.3	-4.84e-04	-2.32e-04	4.41e-02
1	ok 65	0.18	3.36e-02	1.86e-02	7.5	7.5	5.2	5.2	-53.3	-8.7	12.7	-1.23e-03	-2.98e-04	4.07e-02
1	ok 66	0.18	2.23e-02	1.56e-02	7.5	7.5	5.2	5.2	-45.6	1.9	10.3	-2.75e-04	-1.58e-04	1.70e-02
1	ok 67	0.18	2.83e-02	1.57e-02	7.5	7.5	5.2	5.2	-43.1	-1.54e-02	14.9	-3.41e-05	3.00e-06	3.89e-02
1	ok 68	0.18	2.97e-02	1.66e-02	7.5	7.5	5.2	5.2	-45.3	-6.3	15.0	-4.43e-04	-9.78e-05	6.24e-02
1	ok 69	0.18	1.85e-02	1.37e-02	7.5	7.5	5.2	5.2	-28.3	4.7	15.8	9.66e-02	1.33e-02	8.7
1	ok 70	0.18	2.33e-02	1.24e-02	7.5	7.5	5.2	5.2	-26.0	6.1	11.3	-0.2	-5.02e-02	9.1
1	ok 71	0.18	2.52e-02	1.27e-02	7.5	7.5	5.2	5.2	-27.6	-3.1	19.1	-0.2	-5.12e-02	12.3
1	ok 72	0.18	1.41e-02	1.09e-02	7.5	7.5	5.2	5.2	-24.7	4.6	17.2	0.1	-6.89e-02	8.2
1	ok 73	0.18	1.62e-02	9.50e-03	7.5	7.5	5.2	5.2	-18.1	7.2	14.7	0.2	-0.2	-5.3
1	ok 74	0.18	1.94e-02	1.11e-02	7.5	7.5	5.2	5.2	-18.4	0.6	22.6	0.2	-3.26e-03	-10.6
1	ok 75	0.18	2.15e-02	9.20e-03	7.5	7.5	5.2	5.2	-15.6	2.2	19.0	1.02e-02	-0.3	5.1
1	ok 76	0.18	1.63e-02	8.35e-03	7.5	7.5	5.2	5.2	6.8	12.6	16.6	-2.64e-02	-0.2	3.6
1	ok 77	0.18	8.88e-03	6.46e-03	7.5	7.5	5.2	5.2	16.2	5.3	9.8	4.16e-02	-3.48e-02	-5.2
1	ok 78	0.18	2.13e-02	5.93e-03	7.5	7.5	5.2	5.2	2.6	4.9	18.7	-4.10e-02	-0.3	4.1
1	ok 79	0.18	3.55e-02	3.49e-03	7.5	7.5	5.2	5.2	-5.7	3.7	-8.3	1.29e-04	5.43e-04	1.92e-02
1	ok 80	0.18	3.57e-02	5.61e-03	7.5	7.5	5.2	5.2	-12.3	3.2	-9.7	9.22e-05	3.42e-04	-1.86e-03
1	ok 81	0.18	3.63e-02	3.20e-03	7.5	7.5	5.2	5.2	-4.6	5.2	-8.6	2.34e-04	9.60e-04	1.19e-02
1	ok 82	0.18	3.66e-02	5.11e-03	7.5	7.5	5.2	5.2	-11.2	5.5	-9.5	1.97e-04	4.52e-04	-1.90e-04
1	ok 83	0.18	1.72e-02	7.89e-03	7.5	7.5	5.2	5.2	-19.8	3.6	-10.7	7.26e-05	2.50e-04	8.59e-04
1	ok 84	0.18	1.87e-02	7.15e-03	7.5	7.5	5.2	5.2	-18.0	6.1	-10.1	1.25e-04	2.02e-04	1.13e-03
1	ok 85	0.18	1.43e-02	1.02e-02	7.5	7.5	5.2	5.2	-25.1	4.7	-10.2	7.52e-05	8.80e-05	6.33e-03
1	ok 86	0.18	1.16e-02	9.28e-03	7.5	7.5	5.2	5.2	-22.2	7.1	-9.8	6.84e-05	4.71e-05	6.88e-03
1	ok 87	0.18	1.92e-02	1.24e-02	7.5	7.5	5.2	5.2	-34.9	5.5	-4.0	1.33e-04	-3.54e-05	8.82e-03
1	ok 88	0.18	1.47e-02	1.12e-02	7.5	7.5	5.2	5.2	-31.5	8.2	-3.8	6.96e-05	-4.67e-05	1.04e-02
1	ok 89	0.18	2.26e-02	1.39e-02	7.5	7.5	5.2	5.2	-41.5	4.9	1.6	1.27e-04	-5.75e-05	7.29e-03
1	ok 90	0.18	1.90e-02	1.26e-02	7.5	7.5	5.2	5.2	-37.9	7.4	-1.7	3.58e-05	-5.95e-05	9.69e-03
1	ok 91	0.18	2.50e-02	1.47e-02	7.5	7.5	5.2	5.2	-44.3	4.2	3.0	1.02e-04	-9.81e-06	6.37e-03
1	ok 92	0.18	2.30e-02	1.35e-02	7.5	7.5	5.2	5.2	-40.8	6.8	2.4	-1.35e-06	-3.00e-05	9.19e-03
1	ok 93	0.18	2.69e-02	1.51e-02	7.5	7.5	5.2	5.2	-45.5	3.2	4.1	8.21e-05	5.85e-05	7.36e-03
1	ok 94	0.18	2.68e-02	1.40e-02	7.5	7.5	5.2	5.2	-42.2	5.9	3.2	-3.26e-05	1.93e-05	9.84e-03
1	ok 95	0.18	2.78e-02	1.52e-02	7.5	7.5	5.2	5.2	-46.3	2.0	4.1	3.40e-05	8.86e-05	9.24e-03
1	ok 96	0.18	2.98e-02	1.42e-02	7.5	7.5	5.2	5.2	-42.7	4.8	3.8	-5.95e-05	5.77e-05	1.19e-02
1	ok 97	0.18	2.84e-02	1.52e-02	7.5	7.5	5.2	5.2	-46.0	1.0	4.4	3.70e-06	1.03e-04	1.16e-02
1	ok 98	0.18	3.21e-02	1.42e-02	7.5	7.5	5.2	5.2	-43.2	3.9	3.6	-1.01e-04	5.78e-05	1.39e-02
1	ok 99	0.18	2.88e-02	1.51e-02	7.5	7.5	5.2	5.2	-45.6	0.2	4.5	-4.31e-05	8.34e-05	1.36e-02
1	ok 100	0.18	3.36e-02	1.42e-02	7.5	7.5	5.2	5.2	-43.0	2.9	3.8	-1.30e-04	4.61e-05	1.63e-02
1	ok 101	0.18	2.91e-02	1.49e-02	7.5	7.5	5.2	5.2	-45.3	-0.5	4.3	-1.07e-04	3.70e-05	1.49e-02

1	ok 102	0.18	3.43e-02	1.41e-02	7.5	7.5	5.2	5.2	-42.8	2.0	3.8	-1.66e-04	1.32e-05	1.80e-02
1	ok 103	0.18	2.89e-02	1.49e-02	7.5	7.5	5.2	5.2	-45.2	-1.1	4.1	-1.83e-04	-2.36e-05	1.55e-02
1	ok 104	0.18	3.44e-02	1.41e-02	7.5	7.5	5.2	5.2	-42.7	1.3	3.7	-2.07e-04	-3.16e-05	1.89e-02
1	ok 105	0.18	2.84e-02	1.49e-02	7.5	7.5	5.2	5.2	-45.3	-1.4	3.9	-2.62e-04	-8.59e-05	1.54e-02
1	ok 106	0.18	3.39e-02	1.41e-02	7.5	7.5	5.2	5.2	-42.8	0.8	3.7	-2.50e-04	-7.91e-05	1.88e-02
1	ok 107	0.18	2.75e-02	1.50e-02	7.5	7.5	5.2	5.2	-45.7	-1.6	3.8	-3.37e-04	-1.40e-04	1.49e-02
1	ok 108	0.18	3.27e-02	1.42e-02	7.5	7.5	5.2	5.2	-43.1	0.4	3.7	-2.91e-04	-1.22e-04	1.80e-02
1	ok 109	0.18	2.63e-02	1.52e-02	7.5	7.5	5.2	5.2	-46.3	-1.6	3.8	-3.99e-04	-1.81e-04	1.42e-02
1	ok 110	0.18	3.09e-02	1.43e-02	7.5	7.5	5.2	5.2	-43.5	0.3	3.9	-3.24e-04	-1.55e-04	1.66e-02
1	ok 111	0.18	2.53e-02	1.55e-02	7.5	7.5	5.2	5.2	-47.0	-1.3	4.0	-4.42e-04	-2.07e-04	1.38e-02
1	ok 112	0.18	2.86e-02	1.45e-02	7.5	7.5	5.2	5.2	-43.9	0.4	4.3	-3.45e-04	-1.78e-04	1.50e-02
1	ok 113	0.18	2.40e-02	1.57e-02	7.5	7.5	5.2	5.2	-47.6	-0.7	4.6	-4.59e-04	-2.23e-04	1.37e-02
1	ok 114	0.18	2.59e-02	1.47e-02	7.5	7.5	5.2	5.2	-44.3	0.7	5.1	-3.50e-04	-1.92e-04	1.33e-02
1	ok 115	0.18	2.23e-02	1.59e-02	7.5	7.5	5.2	5.2	-47.8	9.84e-02	5.6	-4.44e-04	-2.33e-04	1.37e-02
1	ok 116	0.18	2.27e-02	1.47e-02	7.5	7.5	5.2	5.2	-44.1	1.2	6.3	-3.33e-04	-1.99e-04	1.14e-02
1	ok 117	0.18	2.01e-02	1.58e-02	7.5	7.5	5.2	5.2	-47.2	1.1	7.1	-3.93e-04	-2.34e-04	1.32e-02
1	ok 118	0.18	1.92e-02	1.46e-02	7.5	7.5	5.2	5.2	-43.2	1.9	7.9	-2.92e-04	-1.95e-04	9.13e-03
1	ok 119	0.18	1.87e-02	1.53e-02	7.5	7.5	5.2	5.2	-45.2	2.2	8.9	-3.08e-04	-2.06e-04	1.17e-02
1	ok 120	0.18	1.74e-02	1.41e-02	7.5	7.5	5.2	5.2	-41.0	2.6	9.7	-2.30e-04	-1.67e-04	6.53e-03
1	ok 121	0.18	1.76e-02	1.43e-02	7.5	7.5	5.2	5.2	-41.1	3.1	10.8	-2.04e-04	-1.14e-04	9.59e-03
1	ok 122	0.18	1.63e-02	1.32e-02	7.5	7.5	5.2	5.2	-37.1	3.2	11.4	-1.56e-04	-9.70e-05	4.95e-03
1	ok 123	0.18	1.56e-02	1.25e-02	7.5	7.5	5.2	5.2	-28.0	3.7	16.0	9.27e-02	-1.90e-02	7.8
1	ok 124	0.18	1.45e-02	1.16e-02	7.5	7.5	5.2	5.2	-25.0	2.5	16.3	-9.87e-02	-3.61e-02	6.8
1	ok 125	0.18	1.34e-02	1.03e-02	7.5	7.5	5.2	5.2	-17.8	3.9	17.0	-3.72e-02	-0.1	6.8
1	ok 126	0.18	1.27e-02	9.74e-03	7.5	7.5	5.2	5.2	-18.8	2.2	17.0	-3.65e-02	-0.1	6.4
1	ok 127	0.18	2.07e-02	8.00e-03	7.5	7.5	5.2	5.2	-8.6	2.6	15.6	-5.65e-02	-0.3	5.1
1	ok 128	0.18	2.01e-02	7.70e-03	7.5	7.5	5.2	5.2	-10.4	1.7	15.7	-5.35e-02	-0.3	4.9
1	ok 129	0.18	2.06e-02	5.65e-03	7.5	7.5	5.2	5.2	-0.7	2.7	16.2	-4.92e-02	-0.3	4.0
1	ok 130	0.18	2.00e-02	5.59e-03	7.5	7.5	5.2	5.2	-1.8	2.4	16.8	-4.76e-02	-0.3	3.7
1	ok 131	0.18	1.91e-02	5.50e-03	7.5	7.5	5.2	5.2	-2.1	3.9	14.0	1.28e-04	6.62e-04	5.65e-03
1	ok 132	0.18	1.93e-02	7.55e-03	7.5	7.5	5.2	5.2	-10.9	3.6	15.1	1.05e-04	3.24e-04	1.42e-02
1	ok 133	0.18	1.68e-02	5.52e-03	7.5	7.5	5.2	5.2	2.0	5.1	14.1	6.04e-04	1.05e-03	8.90e-04
1	ok 134	0.18	1.75e-02	7.89e-03	7.5	7.5	5.2	5.2	-10.2	2.7	16.1	1.12e-04	2.43e-04	1.41e-02
1	ok 135	0.18	1.32e-02	9.18e-03	7.5	7.5	5.2	5.2	-21.7	3.2	12.7	3.86e-05	1.19e-04	9.68e-03
1	ok 136	0.18	1.42e-02	9.12e-03	7.5	7.5	5.2	5.2	-19.5	0.9	13.9	-1.68e-05	5.80e-06	2.76e-03
1	ok 137	0.18	2.25e-02	1.08e-02	7.5	7.5	5.2	5.2	-28.3	2.6	12.8	-6.45e-05	-1.79e-05	2.68e-03
1	ok 138	0.18	1.62e-02	1.01e-02	7.5	7.5	5.2	5.2	-25.0	0.1	13.3	-1.20e-04	-5.83e-05	-2.11e-03
1	ok 139	0.18	1.61e-02	1.21e-02	7.5	7.5	5.2	5.2	-33.3	2.3	11.7	-1.38e-04	-9.04e-05	1.11e-03
1	ok 140	0.18	2.11e-02	1.11e-02	7.5	7.5	5.2	5.2	-29.5	0.1	11.9	-1.59e-04	-8.12e-05	-1.43e-03
1	ok 141	0.18	2.01e-02	1.29e-02	7.5	7.5	5.2	5.2	-36.9	2.0	10.1	-1.89e-04	-1.32e-04	3.07e-03
1	ok 142	0.18	2.62e-02	1.17e-02	7.5	7.5	5.2	5.2	-32.8	0.4	10.2	-1.73e-04	-9.71e-05	1.41e-03
1	ok 143	0.18	2.42e-02	1.34e-02	7.5	7.5	5.2	5.2	-39.2	1.8	8.3	-2.27e-04	-1.52e-04	6.35e-03
1	ok 144	0.18	3.13e-02	1.21e-02	7.5	7.5	5.2	5.2	-35.1	0.8	8.4	-1.82e-04	-1.07e-04	4.98e-03
1	ok 145	0.18	2.85e-02	1.35e-02	7.5	7.5	5.2	5.2	-40.3	1.6	6.7	-2.54e-04	-1.57e-04	9.68e-03
1	ok 146	0.18	3.64e-02	1.23e-02	7.5	7.5	5.2	5.2	-36.4	1.2	6.7	-1.92e-04	-1.10e-04	8.57e-03
1	ok 147	0.18	3.24e-02	1.36e-02	7.5	7.5	5.2	5.2	-40.8	1.5	5.3	-2.69e-04	-1.52e-04	1.27e-02
1	ok 148	0.18	4.13e-02	1.24e-02	7.5	7.5	5.2	5.2	-37.1	1.8	5.3	-2.03e-04	-1.09e-04	1.19e-02
1	ok 149	0.18	3.58e-02	1.35e-02	7.5	7.5	5.2	5.2	-40.8	1.6	4.4	-2.73e-04	-1.42e-04	1.53e-02
1	ok 150	0.18	4.55e-02	1.24e-02	7.5	7.5	5.2	5.2	-37.4	2.4	4.2	-2.13e-04	-1.04e-04	1.48e-02
1	ok 151	0.18	3.86e-02	1.34e-02	7.5	7.5	5.2	5.2	-40.6	1.8	3.7	-2.68e-04	-1.25e-04	1.75e-02
1	ok 152	0.18	4.88e-02	1.24e-02	7.5	7.5	5.2	5.2	-37.5	3.1	3.4	-2.22e-04	-9.49e-05	1.72e-02
1	ok 153	0.18	4.08e-02	1.33e-02	7.5	7.5	5.2	5.2	-40.3	2.3	3.4	-2.57e-04	-1.02e-04	1.93e-02
1	ok 154	0.18	5.14e-02	1.23e-02	7.5	7.5	5.2	5.2	-37.5	4.0	2.9	-2.31e-04	-8.21e-05	1.91e-02
1	ok 155	0.18	4.23e-02	1.32e-02	7.5	7.5	5.2	5.2	-40.2	2.9	3.2	-2.43e-04	-7.24e-05	2.03e-02
1	ok 156	0.18	5.32e-02	1.23e-02	7.5	7.5	5.2	5.2	-37.5	4.9	2.7	-2.39e-04	-6.59e-05	2.01e-02
1	ok 157	0.18	4.30e-02	1.32e-02	7.5	7.5	5.2	5.2	-40.1	3.6	3.2	-2.28e-04	-4.01e-05	2.03e-02
1	ok 158	0.18	5.40e-02	1.23e-02	7.5	7.5	5.2	5.2	-37.5	5.9	2.6	-2.48e-04	-4.82e-05	2.02e-02
1	ok 159	0.18	4.28e-02	1.32e-02	7.5	7.5	5.2	5.2	-40.2	4.5	3.1	-2.14e-04	-1.02e-05	1.94e-02

1	ok 160	0.18	5.38e-02	1.23e-02	7.5	7.5	5.2	5.2	-37.5	6.9	2.5	-2.56e-04	-3.22e-05	1.93e-02
1	ok 161	0.18	4.18e-02	1.32e-02	7.5	7.5	5.2	5.2	-40.3	5.4	3.0	-2.00e-04	1.05e-05	1.76e-02
1	ok 162	0.18	5.25e-02	1.23e-02	7.5	7.5	5.2	5.2	-37.5	7.9	2.4	-2.62e-04	-2.17e-05	1.77e-02
1	ok 163	0.18	3.98e-02	1.32e-02	7.5	7.5	5.2	5.2	-40.3	6.5	2.8	-1.87e-04	1.62e-05	1.54e-02
1	ok 164	0.18	5.03e-02	1.23e-02	7.5	7.5	5.2	5.2	-37.4	8.9	2.1	-2.65e-04	-2.04e-05	1.58e-02
1	ok 165	0.18	3.70e-02	1.31e-02	7.5	7.5	5.2	5.2	-40.1	7.5	2.3	-1.72e-04	3.71e-06	1.33e-02
1	ok 166	0.18	4.71e-02	1.21e-02	7.5	7.5	5.2	5.2	-37.0	9.8	-1.8	-2.66e-04	-2.99e-05	1.42e-02
1	ok 167	0.18	3.34e-02	1.29e-02	7.5	7.5	5.2	5.2	-39.1	8.1	2.4	-1.46e-04	-1.51e-05	1.22e-02
1	ok 168	0.18	4.31e-02	1.19e-02	7.5	7.5	5.2	5.2	-36.2	10.6	-2.4	-2.61e-04	-4.91e-05	1.35e-02
1	ok 169	0.18	2.91e-02	1.24e-02	7.5	7.5	5.2	5.2	-37.5	9.0	1.8	-1.20e-04	-5.08e-05	1.21e-02
1	ok 170	0.18	3.84e-02	1.14e-02	7.5	7.5	5.2	5.2	-34.7	11.3	-3.0	-2.52e-04	-7.33e-05	1.41e-02
1	ok 171	0.18	2.42e-02	1.16e-02	7.5	7.5	5.2	5.2	-34.7	9.5	-1.9	-8.38e-05	-7.49e-05	1.28e-02
1	ok 172	0.18	3.29e-02	1.06e-02	7.5	7.5	5.2	5.2	-32.1	11.6	-3.5	-2.34e-04	-9.43e-05	1.58e-02
1	ok 173	0.18	1.89e-02	1.03e-02	7.5	7.5	5.2	5.2	-28.4	10.4	-3.6	-3.58e-05	-7.39e-05	1.39e-02
1	ok 174	0.18	2.75e-02	9.36e-03	7.5	7.5	5.2	5.2	-28.0	11.3	-2.4	-1.98e-04	-9.87e-05	1.73e-02
1	ok 175	0.18	1.35e-02	8.49e-03	7.5	7.5	5.2	5.2	-25.6	9.6	-3.6	4.50e-05	-9.80e-06	1.16e-02
1	ok 176	0.18	2.38e-02	7.74e-03	7.5	7.5	5.2	5.2	-17.0	10.7	-8.9	-9.41e-05	-5.47e-05	1.61e-02
1	ok 177	0.18	1.77e-02	6.45e-03	7.5	7.5	5.2	5.2	-16.3	8.2	-9.7	1.24e-04	1.42e-04	4.75e-03
1	ok 178	0.18	2.97e-02	5.83e-03	7.5	7.5	5.2	5.2	-14.5	9.7	-9.4	1.60e-05	4.51e-05	1.12e-02
1	ok 179	0.18	3.56e-02	4.52e-03	7.5	7.5	5.2	5.2	-10.0	7.7	-8.9	2.31e-04	4.83e-04	-9.96e-04
1	ok 180	0.18	3.18e-02	4.07e-03	7.5	7.5	5.2	5.2	-9.0	9.6	-8.6	1.83e-04	3.75e-04	-6.74e-04
1	ok 181	0.18	3.57e-02	2.49e-03	7.5	7.5	5.2	5.2	-1.1	7.2	-8.2	3.03e-04	1.16e-03	1.83e-03
1	ok 182	0.18	3.21e-02	1.56e-03	7.5	7.5	5.2	5.2	1.2	9.5	-7.1	4.16e-04	1.24e-03	-1.01e-02
1	ok 183	0.18	2.07e-02	5.39e-04	7.5	7.5	5.2	5.2	5.2	19.0	3.9	6.81e-04	1.66e-03	2.60e-02
1	ok 184	0.18	1.87e-02	4.00e-03	7.5	7.5	5.2	5.2	-11.3	14.0	2.9	-2.11e-04	-1.24e-04	9.96e-03
1	ok 185	0.18	6.69e-03	1.54e-03	7.5	7.5	5.2	5.2	0.7	6.8	3.4	-3.21e-03	-1.68e-04	-0.2
1	ok 186	0.18	1.87e-02	4.98e-03	7.5	7.5	5.2	5.2	-5.8	10.2	1.2	-0.1	-2.62e-02	-16.6
1	ok 187	0.18	2.21e-02	5.08e-03	7.5	7.5	5.2	5.2	-15.1	12.1	-1.6	-4.30e-04	-1.09e-04	2.26e-02
1	ok 188	0.18	2.69e-02	4.38e-03	7.5	7.5	5.2	5.2	-11.0	11.9	6.4	-0.2	-3.24e-02	-12.8
1	ok 189	0.18	2.87e-02	6.90e-03	7.5	7.5	5.2	5.2	-20.7	12.3	-1.9	-4.55e-04	-1.31e-04	2.19e-02
1	ok 190	0.18	3.15e-02	6.12e-03	7.5	7.5	5.2	5.2	-18.2	12.8	3.5	-7.75e-04	-1.64e-04	1.39e-02
1	ok 191	0.18	3.74e-02	8.46e-03	7.5	7.5	5.2	5.2	-25.4	12.5	-2.3	-4.49e-04	-1.21e-04	1.88e-02
1	ok 192	0.18	4.00e-02	7.68e-03	7.5	7.5	5.2	5.2	-23.0	13.2	-3.5	-7.18e-04	-1.42e-04	9.71e-03
1	ok 193	0.18	4.39e-02	9.60e-03	7.5	7.5	5.2	5.2	-29.1	13.2	-3.6	-4.26e-04	-1.05e-04	1.60e-02
1	ok 194	0.18	4.61e-02	8.74e-03	7.5	7.5	5.2	5.2	-26.2	14.3	-4.8	-6.13e-04	-1.19e-04	8.28e-03
1	ok 195	0.18	5.00e-02	1.04e-02	7.5	7.5	5.2	5.2	-31.5	13.1	-3.3	-4.05e-04	-8.82e-05	1.39e-02
1	ok 196	0.18	5.09e-02	9.44e-03	7.5	7.5	5.2	5.2	-28.3	14.5	-4.8	-5.50e-04	-1.05e-04	7.60e-03
1	ok 197	0.18	5.54e-02	1.08e-02	7.5	7.5	5.2	5.2	-33.0	12.7	-3.0	-3.88e-04	-7.39e-05	1.31e-02
1	ok 198	0.18	5.61e-02	9.88e-03	7.5	7.5	5.2	5.2	-29.7	14.6	-4.6	-5.10e-04	-9.80e-05	7.49e-03
1	ok 199	0.18	5.97e-02	1.11e-02	7.5	7.5	5.2	5.2	-33.9	12.1	-2.5	-3.71e-04	-6.32e-05	1.35e-02
1	ok 200	0.18	6.02e-02	1.02e-02	7.5	7.5	5.2	5.2	-30.7	14.4	-4.4	-4.79e-04	-9.28e-05	7.80e-03
1	ok 201	0.18	6.33e-02	1.13e-02	7.5	7.5	5.2	5.2	-34.4	11.4	-2.2	-3.53e-04	-5.66e-05	1.47e-02
1	ok 202	0.18	6.32e-02	1.04e-02	7.5	7.5	5.2	5.2	-31.3	14.0	-4.3	-4.46e-04	-8.76e-05	8.36e-03
1	ok 203	0.18	6.58e-02	1.13e-02	7.5	7.5	5.2	5.2	-34.6	10.5	-2.0	-3.30e-04	-5.41e-05	1.62e-02
1	ok 204	0.18	6.55e-02	1.05e-02	7.5	7.5	5.2	5.2	-31.6	13.3	-4.3	-4.04e-04	-8.12e-05	8.98e-03
1	ok 205	0.18	6.72e-02	1.14e-02	7.5	7.5	5.2	5.2	-34.7	9.5	-2.0	-3.02e-04	-5.45e-05	1.74e-02
1	ok 206	0.18	6.68e-02	1.06e-02	7.5	7.5	5.2	5.2	-31.8	12.3	-4.4	-3.53e-04	-7.30e-05	9.46e-03
1	ok 207	0.18	6.74e-02	1.14e-02	7.5	7.5	5.2	5.2	-34.6	8.4	-1.9	-2.70e-04	-5.66e-05	1.81e-02
1	ok 208	0.18	6.71e-02	1.06e-02	7.5	7.5	5.2	5.2	-31.7	11.0	-4.6	-2.94e-04	-6.34e-05	9.68e-03
1	ok 209	0.18	6.63e-02	1.13e-02	7.5	7.5	5.2	5.2	-34.5	7.1	-1.8	-2.36e-04	-5.91e-05	1.79e-02
1	ok 210	0.18	6.63e-02	1.05e-02	7.5	7.5	5.2	5.2	-31.5	9.4	-4.7	-2.31e-04	-5.30e-05	9.55e-03
1	ok 211	0.18	6.41e-02	1.13e-02	7.5	7.5	5.2	5.2	-34.4	5.8	1.9	-2.03e-04	-6.09e-05	1.70e-02
1	ok 212	0.18	6.45e-02	1.04e-02	7.5	7.5	5.2	5.2	-31.2	7.6	-4.6	-1.70e-04	-4.27e-05	9.08e-03
1	ok 213	0.18	6.10e-02	1.12e-02	7.5	7.5	5.2	5.2	-34.1	4.4	2.4	-1.73e-04	-6.18e-05	1.54e-02
1	ok 214	0.18	6.17e-02	1.02e-02	7.5	7.5	5.2	5.2	-30.6	5.5	-4.2	-1.15e-04	-3.33e-05	8.34e-03
1	ok 215	0.18	5.69e-02	1.11e-02	7.5	7.5	5.2	5.2	-33.7	2.9	3.2	-1.48e-04	-6.16e-05	1.33e-02
1	ok 216	0.18	5.78e-02	9.97e-03	7.5	7.5	5.2	5.2	-29.9	3.2	-3.4	-7.07e-05	-2.57e-05	7.40e-03
1	ok 217	0.18	5.17e-02	1.10e-02	7.5	7.5	5.2	5.2	-33.1	1.5	4.4	-1.31e-04	-6.09e-05	1.08e-02

1	ok 218	0.18	5.29e-02	9.64e-03	7.5	7.5	5.2	5.2	-28.9	0.9	4.1	-4.26e-05	-2.07e-05	6.40e-03
1	ok 219	0.18	4.57e-02	1.09e-02	7.5	7.5	5.2	5.2	-23.5	-1.1	8.9	-0.4	-0.1	6.5
1	ok 220	0.18	4.79e-02	9.43e-03	7.5	7.5	5.2	5.2	-27.8	-2.6	5.0	-3.31e-05	-1.88e-05	5.58e-03
1	ok 221	0.18	3.96e-02	1.07e-02	7.5	7.5	5.2	5.2	-22.3	-1.9	10.3	-0.3	-0.1	7.1
1	ok 222	0.18	4.23e-02	9.26e-03	7.5	7.5	5.2	5.2	-26.1	-4.8	6.7	-5.34e-05	-2.19e-05	4.83e-03
1	ok 223	0.18	3.27e-02	1.03e-02	7.5	7.5	5.2	5.2	-28.4	-2.4	9.5	-1.60e-04	-5.85e-05	2.31e-03
1	ok 224	0.18	3.54e-02	9.13e-03	7.5	7.5	5.2	5.2	-23.8	-7.0	8.5	-1.11e-04	-3.15e-05	4.56e-03
1	ok 225	0.18	2.58e-02	9.90e-03	7.5	7.5	5.2	5.2	-25.2	-3.6	11.3	-2.10e-04	-6.23e-05	-3.13e-04
1	ok 226	0.18	2.85e-02	9.00e-03	7.5	7.5	5.2	5.2	-20.6	-8.4	11.1	-2.24e-04	-5.12e-05	5.00e-03
1	ok 227	0.18	1.94e-02	9.35e-03	7.5	7.5	5.2	5.2	-20.9	-4.7	13.1	-2.82e-04	-7.99e-05	-2.79e-03
1	ok 228	0.18	2.26e-02	9.08e-03	7.5	7.5	5.2	5.2	-16.3	-11.0	12.8	-4.35e-04	-8.82e-05	6.75e-03
1	ok 229	0.18	1.42e-02	9.09e-03	7.5	7.5	5.2	5.2	-9.3	-7.6	14.9	-0.1	-2.25e-02	-8.2
1	ok 230	0.18	1.66e-02	9.43e-03	7.5	7.5	5.2	5.2	-10.9	-14.1	14.7	-9.34e-04	-1.67e-04	1.38e-02
1	ok 231	0.18	1.25e-02	8.97e-03	7.5	7.5	5.2	5.2	-8.9	-7.6	18.1	-4.62e-03	0.1	8.6
1	ok 232	0.18	1.52e-02	1.05e-02	7.5	7.5	5.2	5.2	-3.1	-17.8	16.9	-5.42e-02	4.11e-02	7.9
1	ok 233	0.18	1.42e-02	7.25e-03	7.5	7.5	5.2	5.2	-7.26e-02	-1.6	16.2	-3.84e-02	9.94e-02	0.5
1	ok 582	0.18	1.83e-02	1.26e-02	7.5	7.5	5.2	5.2	-5.8	-23.9	20.0	-3.86e-02	3.59e-02	5.5

M_S	x/d	verif.	ver. rid	Af pr-	Af pr+	Af sec-	Af sec+	N z	N o	N zo	M z	M o	M zo
								-57.07	-23.90	-16.33	-0.35	-0.28	-16.58
	0.18	0.07	0.02	7.54	7.54	5.24	5.24	16.16	18.96	22.56	0.31	0.12	12.34

M_S	Nodo	x/d	verif.	ver. rid	Af pr-	Af pr+	Af sec-	Af sec+	N z	N o	N zo	M z	M o	M zo
									kN/ m	kN/ m	kN/ m	kN	kN	kN
2	ok 1	0.18	5.35e-02	8.38e-03	7.5	7.5	5.2	5.2	-25.1	5.4	2.8	2.6	0.2	-5.6
2	ok 2	0.18	2.15e-02	8.48e-03	7.5	7.5	5.2	5.2	-8.9	-2.4	14.1	0.2	0.6	17.8
2	ok 5	0.18	4.75e-02	8.29e-03	7.5	7.5	5.2	5.2	-7.9	-9.6	-14.9	0.3	1.7	-13.4
2	ok 79	0.18	6.64e-02	8.47e-03	7.5	7.5	5.2	5.2	-9.5	-12.5	-14.0	0.4	2.3	-11.1
2	ok 81	0.18	8.14e-02	8.64e-03	7.5	7.5	5.2	5.2	-6.0	-12.5	-15.2	0.5	2.9	10.2
2	ok 181	0.18	9.13e-02	8.41e-03	7.5	7.5	5.2	5.2	-4.1	-11.8	-14.9	0.6	3.3	13.0
2	ok 182	0.18	9.61e-02	7.44e-03	7.5	7.5	5.2	5.2	-2.2	-8.1	14.7	0.6	3.3	-17.5
2	ok 183	0.18	7.76e-02	6.62e-03	7.5	7.5	5.2	5.2	0.2	-5.3	12.9	0.5	1.6	-28.4
2	ok 185	0.18	2.45e-02	3.59e-03	7.5	7.5	5.2	5.2	7.0	3.5	13.8	-0.8	0.3	-42.4
2	ok 235	0.18	7.41e-02	7.55e-02	7.5	7.5	5.2	5.2	-221.8	-37.6	-40.3	-1.1	-0.2	3.7
2	ok 236	0.18	6.06e-02	5.88e-02	7.5	7.5	5.2	5.2	-177.1	-8.7	-21.3	-2.6	-1.68e-02	-104.1
2	ok 237	0.18	5.91e-02	3.50e-02	7.5	7.5	5.2	5.2	-91.6	-17.8	-19.5	-2.1	-0.4	-139.4
2	ok 238	0.18	7.47e-02	3.42e-02	7.5	7.5	5.2	5.2	-85.9	-16.6	-39.0	-3.4	-0.6	-107.8
2	ok 239	0.18	3.92e-02	3.25e-02	7.5	7.5	5.2	5.2	-99.0	-2.9	-5.7	-1.9	-0.1	-52.9
2	ok 240	0.18	4.26e-02	2.97e-02	7.5	7.5	5.2	5.2	-87.1	-4.9	-17.3	-1.6	-0.3	-92.9
2	ok 241	0.18	6.12e-02	2.55e-02	7.5	7.5	5.2	5.2	-63.7	-17.9	-26.3	-2.2	-0.5	-138.2
2	ok 242	0.18	7.37e-02	2.21e-02	7.5	7.5	5.2	5.2	-61.0	-7.5	-19.4	-2.9	-0.6	-142.4
2	ok 243	0.18	3.97e-02	2.31e-02	7.5	7.5	5.2	5.2	-64.9	-8.6	-17.5	-1.3	-0.4	-93.5
2	ok 244	0.18	5.25e-02	2.00e-02	7.5	7.5	5.2	5.2	-52.4	-17.5	-18.9	-1.7	-0.5	-125.9
2	ok 245	0.18	5.92e-02	1.73e-02	7.5	7.5	5.2	5.2	-45.5	-2.5	-12.8	-1.8	-0.4	-146.8
2	ok 246	0.18	3.79e-02	1.92e-02	7.5	7.5	5.2	5.2	-50.5	-10.8	-16.1	-1.2	-0.3	-89.7
2	ok 247	0.18	4.76e-02	1.62e-02	7.5	7.5	5.2	5.2	-40.1	-12.2	-10.5	-1.2	-0.2	-134.7
2	ok 248	0.18	4.66e-02	1.28e-02	7.5	7.5	5.2	5.2	-35.4	-0.8	-11.6	-1.1	-0.2	-138.1
2	ok 249	0.18	3.40e-02	1.62e-02	7.5	7.5	5.2	5.2	-40.7	-11.5	-17.5	-1.0	-0.2	-88.4
2	ok 250	0.18	4.13e-02	1.39e-02	7.5	7.5	5.2	5.2	-35.1	-11.2	-14.8	-0.9	-5.60e-02	-129.7
2	ok 251	0.18	4.07e-02	1.35e-02	7.5	7.5	5.2	5.2	-35.4	-2.1	-14.9	-0.7	-0.1	-138.4
2	ok 252	0.18	2.79e-02	1.39e-02	7.5	7.5	5.2	5.2	-33.0	-11.5	-14.0	-0.7	9.16e-02	-87.4
2	ok 253	0.18	3.19e-02	1.26e-02	7.5	7.5	5.2	5.2	-29.6	-7.5	-11.1	-0.4	0.2	-119.0
2	ok 254	0.18	3.37e-02	1.16e-02	7.5	7.5	5.2	5.2	-27.9	-0.6	-9.1	5.54e-02	6.51e-02	-128.2
2	ok 255	0.18	2.53e-02	1.22e-02	7.5	7.5	5.2	5.2	-27.0	-11.1	-13.7	-0.6	0.4	-81.2
2	ok 256	0.18	3.26e-02	1.10e-02	7.5	7.5	5.2	5.2	-24.3	-7.0	-11.3	-9.85e-02	0.5	-101.7
2	ok 257	0.18	3.77e-02	9.71e-03	7.5	7.5	5.2	5.2	-22.6	0.8	-10.0	0.6	0.2	-106.3
2	ok 258	0.18	3.21e-02	1.08e-02	7.5	7.5	5.2	5.2	-21.6	-9.9	-13.1	-0.3	0.8	-77.6
2	ok 259	0.18	3.40e-02	9.11e-03	7.5	7.5	5.2	5.2	-16.2	-4.8	-14.2	0.2	0.8	-69.3

2	ok 260	0.18	4.17e-02	7.34e-03	7.5	7.5	5.2	5.2	-15.9	2.9	-10.1	1.1	0.4	-81.0
2	ok 261	0.18	4.00e-02	9.60e-03	7.5	7.5	5.2	5.2	-17.4	-9.4	-12.6	-8.94e-02	1.2	-66.7
2	ok 262	0.18	3.53e-02	8.66e-03	7.5	7.5	5.2	5.2	-12.3	-1.9	-14.1	0.3	1.1	-43.8
2	ok 263	0.18	4.23e-02	7.54e-03	7.5	7.5	5.2	5.2	-17.1	3.6	-8.5	2.0	0.6	-7.7
2	ok 264	0.18	4.83e-02	8.78e-03	7.5	7.5	5.2	5.2	-13.6	-9.5	-12.2	0.2	1.6	-49.6
2	ok 265	0.18	3.55e-02	8.67e-03	7.5	7.5	5.2	5.2	-12.3	-2.0	14.1	0.3	1.1	44.0
2	ok 266	0.18	4.25e-02	7.45e-03	7.5	7.5	5.2	5.2	-16.7	3.7	8.3	2.0	0.6	8.1
2	ok 267	0.18	4.82e-02	8.79e-03	7.5	7.5	5.2	5.2	-13.7	-9.5	12.2	0.2	1.6	49.5
2	ok 268	0.18	3.39e-02	9.29e-03	7.5	7.5	5.2	5.2	-16.4	-4.8	14.2	0.2	0.8	69.3
2	ok 269	0.18	4.22e-02	7.35e-03	7.5	7.5	5.2	5.2	-15.5	2.8	10.1	1.1	0.4	82.6
2	ok 270	0.18	3.98e-02	9.61e-03	7.5	7.5	5.2	5.2	-17.6	-9.4	12.6	-9.43e-02	1.2	66.5
2	ok 271	0.18	3.22e-02	1.13e-02	7.5	7.5	5.2	5.2	-25.0	-6.9	11.4	-0.1	0.5	100.8
2	ok 272	0.18	3.75e-02	9.92e-03	7.5	7.5	5.2	5.2	-22.4	0.5	10.1	0.6	0.2	110.6
2	ok 273	0.18	3.22e-02	1.08e-02	7.5	7.5	5.2	5.2	-21.7	-9.9	13.0	-0.3	0.8	77.9
2	ok 274	0.18	3.26e-02	1.24e-02	7.5	7.5	5.2	5.2	-30.3	-8.8	14.4	-0.5	0.2	123.5
2	ok 275	0.18	3.29e-02	1.26e-02	7.5	7.5	5.2	5.2	-32.1	-1.1	15.1	-7.94e-02	4.34e-02	124.0
2	ok 276	0.18	2.53e-02	1.21e-02	7.5	7.5	5.2	5.2	-26.7	-11.0	13.4	-0.5	0.4	82.3
2	ok 277	0.18	3.91e-02	1.35e-02	7.5	7.5	5.2	5.2	-32.7	-9.3	8.7	-0.7	2.59e-02	133.1
2	ok 278	0.18	3.69e-02	1.13e-02	7.5	7.5	5.2	5.2	-30.7	-3.13e-02	10.0	-0.4	-5.08e-02	136.0
2	ok 279	0.18	2.91e-02	1.39e-02	7.5	7.5	5.2	5.2	-33.0	-11.6	14.0	-0.8	8.17e-02	86.3
2	ok 280	0.18	4.66e-02	1.63e-02	7.5	7.5	5.2	5.2	-41.4	-14.1	16.6	-1.2	-0.2	131.7
2	ok 281	0.18	4.86e-02	1.39e-02	7.5	7.5	5.2	5.2	-36.6	-2.3	14.8	-1.2	-0.2	139.7
2	ok 282	0.18	3.35e-02	1.62e-02	7.5	7.5	5.2	5.2	-40.5	-11.6	17.7	-1.0	-0.2	87.9
2	ok 283	0.18	5.31e-02	2.00e-02	7.5	7.5	5.2	5.2	-52.6	-17.4	18.8	-1.7	-0.5	126.8
2	ok 284	0.18	5.96e-02	1.74e-02	7.5	7.5	5.2	5.2	-45.8	-2.5	12.7	-1.9	-0.4	147.1
2	ok 285	0.18	3.82e-02	1.93e-02	7.5	7.5	5.2	5.2	-50.7	-11.0	16.3	-1.3	-0.3	89.0
2	ok 286	0.18	6.15e-02	2.55e-02	7.5	7.5	5.2	5.2	-63.7	-17.9	26.3	-2.2	-0.5	138.6
2	ok 287	0.18	7.39e-02	2.21e-02	7.5	7.5	5.2	5.2	-61.0	-7.5	19.3	-2.9	-0.6	142.3
2	ok 288	0.18	3.96e-02	2.31e-02	7.5	7.5	5.2	5.2	-64.9	-8.6	17.5	-1.3	-0.4	93.3
2	ok 289	0.18	5.94e-02	3.49e-02	7.5	7.5	5.2	5.2	-91.6	-17.8	19.4	-2.1	-0.4	139.7
2	ok 290	0.18	7.49e-02	3.42e-02	7.5	7.5	5.2	5.2	-85.9	-16.6	39.0	-3.4	-0.6	107.9
2	ok 291	0.18	4.26e-02	2.97e-02	7.5	7.5	5.2	5.2	-87.1	-4.9	17.3	-1.6	-0.3	92.9
2	ok 292	0.18	6.06e-02	5.88e-02	7.5	7.5	5.2	5.2	-177.0	-8.7	21.3	-2.6	-1.72e-02	104.4
2	ok 293	0.18	7.40e-02	7.54e-02	7.5	7.5	5.2	5.2	-221.7	-37.6	40.3	-1.1	-0.2	-3.5
2	ok 294	0.18	3.93e-02	3.25e-02	7.5	7.5	5.2	5.2	-99.0	-2.8	5.7	-1.9	-0.1	52.9
2	ok 295	0.18	3.42e-02	2.46e-02	7.5	7.5	5.2	5.2	-75.2	-1.5	-2.5	-1.7	-6.41e-02	-38.8
2	ok 296	0.18	3.88e-02	2.34e-02	7.5	7.5	5.2	5.2	-70.4	-3.0	-9.2	-1.6	-0.2	-69.3
2	ok 297	0.18	4.10e-02	2.08e-02	7.5	7.5	5.2	5.2	-54.2	0.8	-1.4	-2.1	-6.00e-02	-0.2
2	ok 298	0.18	4.04e-02	1.97e-02	7.5	7.5	5.2	5.2	-51.4	0.1	-4.6	-2.0	-0.3	-17.4
2	ok 299	0.18	3.62e-02	2.10e-02	7.5	7.5	5.2	5.2	-60.9	-5.0	-13.4	-1.4	-0.3	-67.8
2	ok 300	0.18	3.72e-02	1.78e-02	7.5	7.5	5.2	5.2	-46.0	-1.5	-5.3	-1.8	-0.3	-16.5
2	ok 301	0.18	3.24e-02	1.77e-02	7.5	7.5	5.2	5.2	-49.3	-7.5	-14.5	-1.2	-0.3	-67.2
2	ok 302	0.18	3.35e-02	1.55e-02	7.5	7.5	5.2	5.2	-39.5	-5.1	-9.4	-1.5	-0.3	-15.8
2	ok 303	0.18	2.86e-02	1.52e-02	7.5	7.5	5.2	5.2	-39.2	-8.3	-15.9	-1.0	-0.1	-67.0
2	ok 304	0.18	2.91e-02	1.33e-02	7.5	7.5	5.2	5.2	-32.5	-6.6	-11.0	-1.3	-0.2	-15.8
2	ok 305	0.18	2.44e-02	1.32e-02	7.5	7.5	5.2	5.2	-31.4	-10.4	-15.7	-0.8	5.90e-02	-67.0
2	ok 306	0.18	2.38e-02	1.18e-02	7.5	7.5	5.2	5.2	-26.0	-9.4	-12.4	-1.0	0.1	-15.8
2	ok 307	0.18	2.47e-02	1.17e-02	7.5	7.5	5.2	5.2	-25.0	-11.6	-15.5	-0.5	0.3	-27.9
2	ok 308	0.18	2.03e-02	1.07e-02	7.5	7.5	5.2	5.2	-20.2	-10.6	-13.3	-0.6	0.5	-16.3
2	ok 309	0.18	3.25e-02	1.06e-02	7.5	7.5	5.2	5.2	-19.8	-11.7	-13.9	-0.2	0.9	-28.6
2	ok 310	0.18	3.07e-02	9.92e-03	7.5	7.5	5.2	5.2	-15.3	-11.3	-13.8	-0.3	1.0	-16.4
2	ok 311	0.18	4.44e-02	9.73e-03	7.5	7.5	5.2	5.2	-15.5	-11.7	-13.7	-1.61e-02	1.4	-54.6
2	ok 312	0.18	4.49e-02	9.38e-03	7.5	7.5	5.2	5.2	-11.5	-11.7	-14.2	2.89e-02	1.6	-14.5
2	ok 313	0.18	5.80e-02	9.05e-03	7.5	7.5	5.2	5.2	-9.4	-11.5	-14.4	0.3	2.0	-35.9
2	ok 314	0.18	6.52e-02	8.82e-03	7.5	7.5	5.2	5.2	-8.7	-12.2	-14.2	0.3	2.3	-6.0
2	ok 315	0.18	5.79e-02	9.05e-03	7.5	7.5	5.2	5.2	-9.4	-11.5	14.4	0.3	2.0	36.0
2	ok 316	0.18	6.51e-02	8.81e-03	7.5	7.5	5.2	5.2	-8.7	-12.2	14.2	0.3	2.3	6.1
2	ok 317	0.18	4.45e-02	9.72e-03	7.5	7.5	5.2	5.2	-15.6	-11.7	13.7	-1.39e-02	1.4	54.7

2	ok 318	0.18	4.49e-02	9.37e-03	7.5	7.5	5.2	5.2	-11.5	-11.7	14.1	2.82e-02	1.6	14.6
2	ok 319	0.18	3.25e-02	1.06e-02	7.5	7.5	5.2	5.2	-19.7	-11.7	13.8	-0.2	0.9	28.7
2	ok 320	0.18	3.07e-02	9.91e-03	7.5	7.5	5.2	5.2	-15.3	-11.3	13.8	-0.3	1.0	16.5
2	ok 321	0.18	2.48e-02	1.17e-02	7.5	7.5	5.2	5.2	-24.9	-11.6	15.5	-0.5	0.3	27.8
2	ok 322	0.18	2.03e-02	1.07e-02	7.5	7.5	5.2	5.2	-20.2	-10.6	13.2	-0.6	0.5	16.4
2	ok 323	0.18	2.28e-02	1.32e-02	7.5	7.5	5.2	5.2	-31.4	-10.8	14.3	-0.7	0.1	27.6
2	ok 324	0.18	2.38e-02	1.18e-02	7.5	7.5	5.2	5.2	-26.0	-9.4	12.3	-1.0	0.1	15.8
2	ok 325	0.18	2.88e-02	1.51e-02	7.5	7.5	5.2	5.2	-39.2	-8.3	15.9	-1.0	-0.1	67.0
2	ok 326	0.18	2.91e-02	1.33e-02	7.5	7.5	5.2	5.2	-32.5	-6.7	11.0	-1.3	-0.2	15.8
2	ok 327	0.18	3.25e-02	1.77e-02	7.5	7.5	5.2	5.2	-49.2	-7.5	14.5	-1.2	-0.3	67.1
2	ok 328	0.18	3.35e-02	1.55e-02	7.5	7.5	5.2	5.2	-39.5	-5.1	9.4	-1.5	-0.3	15.8
2	ok 329	0.18	3.61e-02	2.10e-02	7.5	7.5	5.2	5.2	-61.0	-5.0	13.5	-1.4	-0.3	67.7
2	ok 330	0.18	3.72e-02	1.78e-02	7.5	7.5	5.2	5.2	-46.0	-1.5	5.3	-1.8	-0.3	16.4
2	ok 331	0.18	3.88e-02	2.34e-02	7.5	7.5	5.2	5.2	-70.4	-3.0	9.2	-1.6	-0.2	69.2
2	ok 332	0.18	4.04e-02	1.97e-02	7.5	7.5	5.2	5.2	-51.4	0.1	4.6	-2.0	-0.3	17.4
2	ok 333	0.18	3.42e-02	2.46e-02	7.5	7.5	5.2	5.2	-75.2	-1.5	2.5	-1.7	-6.38e-02	38.7
2	ok 334	0.18	4.10e-02	2.08e-02	7.5	7.5	5.2	5.2	-54.3	0.8	1.4	-2.1	-5.97e-02	0.2
2	ok 335	0.18	6.90e-02	8.52e-03	7.5	7.5	5.2	5.2	-6.6	-11.8	13.7	0.2	2.5	-6.8
2	ok 336	0.18	6.54e-02	7.50e-03	7.5	7.5	5.2	5.2	-3.5	-10.4	13.4	0.2	2.3	-31.9
2	ok 337	0.18	4.47e-02	8.60e-03	7.5	7.5	5.2	5.2	-8.7	-11.2	13.3	-8.81e-02	1.6	-9.1
2	ok 338	0.18	4.08e-02	7.55e-03	7.5	7.5	5.2	5.2	-5.2	-8.5	12.6	-0.4	1.4	-52.7
2	ok 339	0.18	2.61e-02	8.83e-03	7.5	7.5	5.2	5.2	-11.9	-10.5	12.6	-0.5	0.9	-13.3
2	ok 340	0.18	2.82e-02	7.61e-03	7.5	7.5	5.2	5.2	-7.7	-8.5	11.6	-1.0	0.7	-67.5
2	ok 341	0.18	2.22e-02	9.20e-03	7.5	7.5	5.2	5.2	-16.0	-9.6	11.4	-1.0	0.4	-16.2
2	ok 342	0.18	4.12e-02	7.74e-03	7.5	7.5	5.2	5.2	-10.7	-8.2	10.2	-1.6	0.2	-75.2
2	ok 343	0.18	3.11e-02	9.85e-03	7.5	7.5	5.2	5.2	-21.1	-8.5	9.7	-1.5	8.15e-03	-17.3
2	ok 344	0.18	5.47e-02	8.30e-03	7.5	7.5	5.2	5.2	-18.4	-7.6	9.6	-2.0	-0.1	-63.8
2	ok 345	0.18	3.94e-02	1.10e-02	7.5	7.5	5.2	5.2	-30.9	-7.2	8.3	-1.7	-0.3	-13.0
2	ok 346	0.18	6.58e-02	9.33e-03	7.5	7.5	5.2	5.2	-18.3	-13.0	-6.3	-2.4	-0.3	-47.5
2	ok 347	0.18	4.68e-02	1.30e-02	7.5	7.5	5.2	5.2	-38.5	-5.6	5.1	-2.1	-0.4	-11.4
2	ok 348	0.18	7.53e-02	1.16e-02	7.5	7.5	5.2	5.2	-27.2	-12.8	-10.9	-2.9	-0.5	-42.0
2	ok 349	0.18	5.26e-02	1.54e-02	7.5	7.5	5.2	5.2	-43.3	-4.2	-5.4	-2.1	-0.3	9.8
2	ok 350	0.18	8.49e-02	1.64e-02	7.5	7.5	5.2	5.2	-44.9	-7.3	-14.8	-3.4	-0.5	-36.8
2	ok 351	0.18	5.69e-02	1.76e-02	7.5	7.5	5.2	5.2	-53.8	-2.0	1.8	-2.7	-0.3	-7.0
2	ok 352	0.18	9.44e-02	1.95e-02	7.5	7.5	5.2	5.2	-54.8	-11.6	-14.0	-3.7	-0.4	-38.7
2	ok 353	0.18	6.12e-02	1.88e-02	7.5	7.5	5.2	5.2	-57.5	-0.7	1.3	-2.8	-3.03e-02	-7.3
2	ok 354	0.18	9.21e-02	2.07e-02	7.5	7.5	5.2	5.2	-57.4	1.7	2.3	-3.9	9.06e-03	-4.5
2	ok 355	0.18	6.91e-02	8.53e-03	7.5	7.5	5.2	5.2	-6.6	-11.8	-13.7	0.2	2.5	6.8
2	ok 356	0.18	6.54e-02	7.50e-03	7.5	7.5	5.2	5.2	-3.5	-10.4	-13.4	0.2	2.3	31.9
2	ok 357	0.18	4.47e-02	8.61e-03	7.5	7.5	5.2	5.2	-8.7	-11.2	-13.3	-8.99e-02	1.6	9.1
2	ok 358	0.18	4.09e-02	7.55e-03	7.5	7.5	5.2	5.2	-5.2	-8.5	-12.7	-0.4	1.4	52.9
2	ok 359	0.18	2.61e-02	8.84e-03	7.5	7.5	5.2	5.2	-11.9	-10.5	-12.6	-0.5	0.9	13.3
2	ok 360	0.18	2.75e-02	7.62e-03	7.5	7.5	5.2	5.2	-7.6	-8.4	-11.6	-1.0	0.7	67.5
2	ok 361	0.18	2.21e-02	9.21e-03	7.5	7.5	5.2	5.2	-16.0	-9.6	-11.4	-1.0	0.4	16.2
2	ok 362	0.18	4.16e-02	7.74e-03	7.5	7.5	5.2	5.2	-10.6	-7.4	-10.3	-1.6	0.1	75.1
2	ok 363	0.18	3.11e-02	9.86e-03	7.5	7.5	5.2	5.2	-21.1	-8.5	-9.7	-1.5	6.68e-03	17.3
2	ok 364	0.18	5.45e-02	8.30e-03	7.5	7.5	5.2	5.2	-18.6	-8.4	-8.9	-2.0	-0.1	64.0
2	ok 365	0.18	3.94e-02	1.11e-02	7.5	7.5	5.2	5.2	-31.0	-7.3	-8.3	-1.7	-0.2	13.3
2	ok 366	0.18	6.57e-02	9.33e-03	7.5	7.5	5.2	5.2	-18.4	-13.0	6.3	-2.4	-0.3	47.4
2	ok 367	0.18	4.68e-02	1.30e-02	7.5	7.5	5.2	5.2	-33.2	-7.2	5.9	-1.8	-0.3	-7.6
2	ok 368	0.18	7.53e-02	1.16e-02	7.5	7.5	5.2	5.2	-27.2	-12.8	10.9	-2.9	-0.5	41.9
2	ok 369	0.18	5.25e-02	1.54e-02	7.5	7.5	5.2	5.2	-46.6	-3.1	-2.0	-2.4	-0.4	9.9
2	ok 370	0.18	8.49e-02	1.64e-02	7.5	7.5	5.2	5.2	-44.9	-7.3	14.7	-3.4	-0.5	36.7
2	ok 371	0.18	5.69e-02	1.76e-02	7.5	7.5	5.2	5.2	-53.8	-2.0	-1.8	-2.7	-0.3	7.0
2	ok 372	0.18	9.44e-02	1.95e-02	7.5	7.5	5.2	5.2	-54.8	-11.6	14.0	-3.7	-0.4	38.6
2	ok 373	0.18	6.12e-02	1.88e-02	7.5	7.5	5.2	5.2	-57.5	-0.7	-1.3	-2.8	-3.05e-02	7.2
2	ok 374	0.18	9.21e-02	2.07e-02	7.5	7.5	5.2	5.2	-57.4	1.7	-2.3	-3.9	9.31e-03	4.5
2	ok 375	0.18	0.2	3.61e-02	7.5	7.5	5.2	5.2	-109.1	-2.5	12.1	-7.0	1.00e-03	41.9

2	ok 376	0.18	0.2	6.54e-02	7.5	7.5	5.2	5.2	-142.4	-61.2	85.7	-7.8	-0.5	230.8
2	ok 377	0.18	0.3	0.2	7.5	7.5	5.2	5.2	-432.6	-74.7	158.7	-18.6	-0.4	369.7
2	ok 378	0.18	0.3	8.16e-03	7.5	7.5	5.2	5.2	-12.1	-10.2	13.1	-10.9	-1.4	282.4
2	ok 379	0.18	0.1	1.60e-02	7.5	7.5	5.2	5.2	-20.4	-35.5	17.5	-5.8	-0.8	183.9
2	ok 380	0.18	0.2	2.70e-03	7.5	7.5	5.2	5.2	-3.8	3.6	-7.1	-7.5	-1.2	255.7
2	ok 381	0.18	0.1	9.61e-03	7.5	7.5	5.2	5.2	-7.6	-19.8	8.4	-5.1	-0.8	93.6
2	ok 382	0.18	0.2	5.85e-03	7.5	7.5	5.2	5.2	-10.2	2.6	-12.2	-3.0	-0.5	238.2
2	ok 383	0.18	0.1	7.27e-03	7.5	7.5	5.2	5.2	-10.1	-3.9	-7.8	-4.0	-0.6	198.0
2	ok 384	0.18	0.1	5.49e-03	7.5	7.5	5.2	5.2	-12.7	2.2	-8.5	-4.9	-0.9	229.5
2	ok 385	0.18	9.88e-02	6.51e-03	7.5	7.5	5.2	5.2	-12.5	-5.6	-9.9	-3.0	-0.3	154.3
2	ok 386	0.18	0.1	5.10e-03	7.5	7.5	5.2	5.2	-7.3	3.1	-10.8	-3.5	-0.6	211.2
2	ok 387	0.18	8.09e-02	6.24e-03	7.5	7.5	5.2	5.2	-5.4	-3.4	-9.6	-2.5	-0.2	184.8
2	ok 388	0.18	9.62e-02	5.10e-03	7.5	7.5	5.2	5.2	-7.3	2.4	-11.9	-3.2	-0.6	190.1
2	ok 389	0.18	6.34e-02	6.02e-03	7.5	7.5	5.2	5.2	-4.0	-2.7	-11.1	-1.8	9.98e-02	169.3
2	ok 390	0.18	7.81e-02	4.37e-03	7.5	7.5	5.2	5.2	-5.7	3.3	-11.0	-2.4	-0.4	178.0
2	ok 391	0.18	4.40e-02	5.92e-03	7.5	7.5	5.2	5.2	-2.1	-3.7	-11.6	-1.0	0.6	144.2
2	ok 392	0.18	5.94e-02	3.99e-03	7.5	7.5	5.2	5.2	-1.7	3.7	-12.6	-1.5	-0.1	155.9
2	ok 393	0.18	4.64e-02	6.09e-03	7.5	7.5	5.2	5.2	-2.3	-5.0	-14.3	-0.2	0.9	77.3
2	ok 394	0.18	4.44e-02	3.95e-03	7.5	7.5	5.2	5.2	1.1	4.2	-12.7	-0.8	5.81e-02	110.2
2	ok 395	0.18	4.67e-02	6.07e-03	7.5	7.5	5.2	5.2	-2.4	-4.9	14.3	-0.2	0.9	-78.3
2	ok 396	0.18	4.47e-02	4.16e-03	7.5	7.5	5.2	5.2	1.5	3.8	9.0	-1.1	-0.1	-108.1
2	ok 397	0.18	4.39e-02	5.94e-03	7.5	7.5	5.2	5.2	-4.5	-4.3	13.3	-0.8	0.7	-113.2
2	ok 398	0.18	5.92e-02	4.03e-03	7.5	7.5	5.2	5.2	-2.0	3.4	12.4	-1.5	-0.1	-155.9
2	ok 399	0.18	6.25e-02	6.01e-03	7.5	7.5	5.2	5.2	-3.1	-2.9	11.5	-1.6	0.1	-169.7
2	ok 400	0.18	7.86e-02	4.10e-03	7.5	7.5	5.2	5.2	-3.6	2.6	11.3	-2.3	-0.3	-179.4
2	ok 401	0.18	8.24e-02	6.25e-03	7.5	7.5	5.2	5.2	-5.6	-3.2	9.8	-2.4	-0.2	-185.5
2	ok 402	0.18	9.80e-02	5.26e-03	7.5	7.5	5.2	5.2	-7.9	2.5	12.1	-3.1	-0.5	-196.0
2	ok 403	0.18	9.86e-02	6.48e-03	7.5	7.5	5.2	5.2	-12.5	-5.6	9.8	-3.1	-0.3	-155.9
2	ok 404	0.18	0.1	4.97e-03	7.5	7.5	5.2	5.2	-8.0	2.9	11.2	-3.5	-0.6	-211.9
2	ok 405	0.18	0.1	7.26e-03	7.5	7.5	5.2	5.2	-6.9	-13.9	-9.3	-1.9	-0.3	-59.2
2	ok 406	0.18	0.1	5.51e-03	7.5	7.5	5.2	5.2	-12.8	2.1	8.6	-4.9	-0.9	-229.6
2	ok 407	0.18	0.1	9.60e-03	7.5	7.5	5.2	5.2	-12.0	-18.9	-3.9	-4.6	-0.7	-192.8
2	ok 408	0.18	0.2	5.86e-03	7.5	7.5	5.2	5.2	-10.2	2.5	12.3	-3.0	-0.5	-238.3
2	ok 409	0.18	0.1	1.61e-02	7.5	7.5	5.2	5.2	-20.4	-35.6	-17.5	-5.8	-0.8	-184.0
2	ok 410	0.18	0.2	2.69e-03	7.5	7.5	5.2	5.2	-3.7	3.6	7.1	-7.5	-1.2	-255.7
2	ok 411	0.18	0.2	6.54e-02	7.5	7.5	5.2	5.2	-142.3	-61.2	-85.8	-7.8	-0.5	-231.1
2	ok 412	0.18	0.3	8.18e-03	7.5	7.5	5.2	5.2	-12.0	-10.2	-13.2	-10.9	-1.4	-282.2
2	ok 413	0.18	0.2	3.62e-02	7.5	7.5	5.2	5.2	-109.2	-2.5	-12.1	-7.0	1.54e-03	-42.0
2	ok 414	0.18	0.3	0.2	7.5	7.5	5.2	5.2	-432.8	-74.6	-158.7	-18.6	-0.4	-369.6

M_S	x/d	verif.	ver. rid	Af pr-	Af pr+	Af sec-	Af sec+	N z	N o	N zo	M z	M o	M zo
								-432.80	-74.71	-158.71	-18.62	-1.40	-369.57
	0.18	0.29	0.16	7.54	7.54	5.24	5.24	7.03	5.40	158.70	2.61	3.30	369.69

M_S	Nodo	x/d	verif.	ver. rid	Af pr-	Af pr+	Af sec-	Af sec+	N z	N o	N zo	M z	M o	M zo
									kN/ m	kN/ m	kN/ m	kN	kN	kN
3	ok 76	0.18	3.17e-02	7.44e-03	7.5	7.5	5.2	5.2	-18.1	-7.4	8.1	-0.9	-0.4	1.7
3	ok 77	0.18	2.09e-02	4.16e-03	7.5	7.5	5.2	5.2	-12.2	2.8	2.9	-1.0	-0.2	-1.5
3	ok 78	0.18	4.27e-02	6.64e-03	7.5	7.5	5.2	5.2	-8.5	-9.1	7.0	-0.1	-0.9	-8.4
3	ok 129	0.18	4.69e-02	6.78e-03	7.5	7.5	5.2	5.2	-11.6	-12.1	6.5	-0.2	-1.4	3.6
3	ok 130	0.18	5.27e-02	7.36e-03	7.5	7.5	5.2	5.2	-4.7	-11.7	-12.3	-0.2	-1.0	-9.0
3	ok 131	0.18	5.57e-02	7.65e-03	7.5	7.5	5.2	5.2	-3.4	-12.7	12.5	-0.2	-1.1	9.3
3	ok 133	0.18	5.34e-02	7.61e-03	7.5	7.5	5.2	5.2	-1.3	-13.4	12.8	-0.2	-1.5	10.5
3	ok 233	0.18	3.28e-02	7.49e-03	7.5	7.5	5.2	5.2	2.9	-15.3	-10.9	0.4	-0.7	-1.3
3	ok 415	0.18	4.98e-02	1.46e-02	7.5	7.5	5.2	5.2	-38.0	-6.6	-11.2	1.1	0.2	84.9
3	ok 418	0.18	5.92e-02	1.84e-02	7.5	7.5	5.2	5.2	-49.8	-9.7	-13.0	1.5	0.3	94.7
3	ok 421	0.18	7.02e-02	2.28e-02	7.5	7.5	5.2	5.2	-64.3	-12.0	-17.2	2.1	0.4	98.1
3	ok 422	0.18	4.55e-02	1.25e-02	7.5	7.5	5.2	5.2	-31.2	-4.3	-14.7	0.8	0.1	85.2

3	ok 424	0.18	7.89e-02	2.63e-02	7.5	7.5	5.2	5.2	-75.7	-14.1	-15.3	3.1	0.5	114.4
3	ok 427	0.18	8.68e-02	3.82e-02	7.5	7.5	5.2	5.2	-112.3	-20.9	-20.5	4.0	0.3	73.3
3	ok 428	0.18	2.83e-02	7.49e-03	7.5	7.5	5.2	5.2	-15.7	-7.0	10.3	-0.9	-0.7	-14.3
3	ok 429	0.18	2.25e-02	6.21e-03	7.5	7.5	5.2	5.2	-12.5	2.6	3.7	-0.9	-0.3	-11.5
3	ok 430	0.18	3.50e-02	6.96e-03	7.5	7.5	5.2	5.2	-8.7	-9.3	10.3	-9.74e-02	-0.9	-32.7
3	ok 431	0.18	2.93e-02	8.22e-03	7.5	7.5	5.2	5.2	-17.8	-6.5	11.3	-0.8	-0.6	-34.0
3	ok 432	0.18	2.72e-02	7.19e-03	7.5	7.5	5.2	5.2	-16.4	0.4	4.8	-0.8	-0.2	-29.1
3	ok 433	0.18	2.56e-02	7.82e-03	7.5	7.5	5.2	5.2	-12.1	-8.5	10.6	0.1	-0.7	-43.1
3	ok 434	0.18	3.30e-02	9.57e-03	7.5	7.5	5.2	5.2	-22.6	-6.2	7.2	-0.6	-0.4	-48.1
3	ok 435	0.18	3.33e-02	8.29e-03	7.5	7.5	5.2	5.2	-19.0	-0.9	12.1	-0.6	-0.2	-41.8
3	ok 436	0.18	2.14e-02	9.04e-03	7.5	7.5	5.2	5.2	-16.5	-8.2	11.6	0.2	-0.5	-50.3
3	ok 437	0.18	3.80e-02	1.13e-02	7.5	7.5	5.2	5.2	-25.8	-7.6	15.0	0.5	-5.85e-02	-83.3
3	ok 438	0.18	3.80e-02	1.06e-02	7.5	7.5	5.2	5.2	-25.1	-2.4	14.4	0.6	8.47e-02	-75.1
3	ok 439	0.18	2.00e-02	1.04e-02	7.5	7.5	5.2	5.2	-24.1	-9.1	12.8	0.4	-0.2	-54.3
3	ok 440	0.18	4.26e-02	1.29e-02	7.5	7.5	5.2	5.2	-30.6	-7.0	9.6	0.7	4.09e-02	-88.7
3	ok 441	0.18	4.24e-02	1.20e-02	7.5	7.5	5.2	5.2	-29.9	-1.9	9.1	0.7	0.1	-83.1
3	ok 442	0.18	2.50e-02	1.20e-02	7.5	7.5	5.2	5.2	-29.9	-7.7	11.3	0.6	-2.67e-02	-56.6
3	ok 443	0.18	4.75e-02	1.55e-02	7.5	7.5	5.2	5.2	-39.1	-8.6	17.2	1.0	0.2	-89.9
3	ok 444	0.18	5.12e-02	1.42e-02	7.5	7.5	5.2	5.2	-36.0	-6.2	16.1	1.2	0.2	-87.5
3	ok 445	0.18	2.89e-02	1.38e-02	7.5	7.5	5.2	5.2	-36.4	-6.4	14.0	0.8	0.1	-57.6
3	ok 446	0.18	5.38e-02	1.83e-02	7.5	7.5	5.2	5.2	-48.6	-6.9	11.7	1.4	0.2	-90.4
3	ok 447	0.18	5.97e-02	1.87e-02	7.5	7.5	5.2	5.2	-50.3	-9.7	13.0	1.5	0.3	-95.0
3	ok 448	0.18	3.25e-02	1.57e-02	7.5	7.5	5.2	5.2	-43.7	-5.5	11.3	1.0	0.2	-59.1
3	ok 449	0.18	6.06e-02	2.07e-02	7.5	7.5	5.2	5.2	-56.9	-5.0	18.0	2.0	0.3	-90.3
3	ok 450	0.18	7.04e-02	2.29e-02	7.5	7.5	5.2	5.2	-63.2	-11.5	14.2	2.6	0.5	-92.7
3	ok 451	0.18	3.51e-02	1.78e-02	7.5	7.5	5.2	5.2	-51.3	-4.6	11.5	1.3	0.3	-43.2
3	ok 452	0.18	6.44e-02	2.40e-02	7.5	7.5	5.2	5.2	-69.8	-6.3	8.6	2.4	0.3	-86.4
3	ok 453	0.18	7.89e-02	2.63e-02	7.5	7.5	5.2	5.2	-75.9	-14.2	15.3	3.1	0.5	-114.3
3	ok 454	0.18	3.85e-02	2.13e-02	7.5	7.5	5.2	5.2	-63.2	-3.0	10.6	1.5	0.2	-39.1
3	ok 455	0.18	6.03e-02	3.70e-02	7.5	7.5	5.2	5.2	-111.9	-6.4	11.9	2.6	6.15e-02	-34.0
3	ok 456	0.18	8.68e-02	3.83e-02	7.5	7.5	5.2	5.2	-112.4	-20.9	20.5	4.0	0.3	-73.3
3	ok 457	0.18	3.83e-02	2.29e-02	7.5	7.5	5.2	5.2	-69.8	-2.6	3.6	1.6	6.44e-02	-17.8
3	ok 458	0.18	2.83e-02	7.47e-03	7.5	7.5	5.2	5.2	-15.7	-6.9	-10.2	-0.9	-0.7	14.3
3	ok 459	0.18	2.25e-02	6.22e-03	7.5	7.5	5.2	5.2	-12.5	2.6	-3.6	-0.9	-0.3	11.2
3	ok 460	0.18	3.50e-02	6.95e-03	7.5	7.5	5.2	5.2	-8.6	-9.3	-10.3	-9.66e-02	-1.0	32.8
3	ok 461	0.18	2.94e-02	8.17e-03	7.5	7.5	5.2	5.2	-17.6	-6.5	-11.2	-0.8	-0.6	34.0
3	ok 462	0.18	2.71e-02	7.15e-03	7.5	7.5	5.2	5.2	-16.4	0.4	-4.7	-0.8	-0.2	29.1
3	ok 463	0.18	2.57e-02	7.81e-03	7.5	7.5	5.2	5.2	-12.1	-8.6	-10.6	0.1	-0.7	43.1
3	ok 464	0.18	3.30e-02	9.49e-03	7.5	7.5	5.2	5.2	-22.4	-6.3	-7.2	-0.6	-0.4	48.2
3	ok 465	0.18	3.32e-02	8.15e-03	7.5	7.5	5.2	5.2	-18.6	-0.8	-12.0	-0.6	-0.2	41.7
3	ok 466	0.18	2.14e-02	9.04e-03	7.5	7.5	5.2	5.2	-16.5	-8.3	-11.6	0.2	-0.5	50.2
3	ok 467	0.18	3.79e-02	1.13e-02	7.5	7.5	5.2	5.2	-25.5	-6.6	-10.3	0.5	-7.47e-02	80.1
3	ok 468	0.18	3.74e-02	1.04e-02	7.5	7.5	5.2	5.2	-23.9	-2.5	-8.9	0.5	7.53e-02	77.8
3	ok 469	0.18	2.03e-02	1.05e-02	7.5	7.5	5.2	5.2	-24.3	-9.1	-12.8	0.4	-0.2	54.8
3	ok 470	0.18	4.30e-02	1.33e-02	7.5	7.5	5.2	5.2	-32.1	-8.3	-16.2	0.8	6.52e-02	88.4
3	ok 471	0.18	2.46e-02	1.21e-02	7.5	7.5	5.2	5.2	-30.0	-7.6	-11.4	0.6	-2.87e-02	57.2
3	ok 472	0.18	4.84e-02	1.53e-02	7.5	7.5	5.2	5.2	-38.7	-7.5	-10.4	1.1	0.2	91.3
3	ok 473	0.18	2.92e-02	1.38e-02	7.5	7.5	5.2	5.2	-36.6	-6.3	-13.9	0.8	0.1	59.6
3	ok 474	0.18	5.34e-02	1.82e-02	7.5	7.5	5.2	5.2	-49.1	-7.2	-11.4	1.4	0.2	90.0
3	ok 475	0.18	3.27e-02	1.57e-02	7.5	7.5	5.2	5.2	-42.4	-4.2	-14.6	1.2	0.2	43.9
3	ok 476	0.18	6.03e-02	2.07e-02	7.5	7.5	5.2	5.2	-56.8	-5.0	-18.0	2.1	0.3	88.1
3	ok 477	0.18	3.52e-02	1.77e-02	7.5	7.5	5.2	5.2	-51.3	-4.6	-11.5	1.3	0.3	43.4
3	ok 478	0.18	6.43e-02	2.40e-02	7.5	7.5	5.2	5.2	-69.7	-6.3	-8.6	2.4	0.3	86.1
3	ok 479	0.18	3.85e-02	2.12e-02	7.5	7.5	5.2	5.2	-63.1	-3.0	-10.6	1.5	0.2	39.1
3	ok 480	0.18	6.02e-02	3.70e-02	7.5	7.5	5.2	5.2	-111.7	-6.4	-11.9	2.6	6.12e-02	33.9
3	ok 481	0.18	3.82e-02	2.28e-02	7.5	7.5	5.2	5.2	-69.6	-2.6	-3.6	1.6	5.89e-02	19.5
3	ok 482	0.18	2.76e-02	1.77e-02	7.5	7.5	5.2	5.2	-54.0	-1.2	1.7	1.4	4.01e-02	-6.4
3	ok 483	0.18	2.70e-02	1.71e-02	7.5	7.5	5.2	5.2	-51.4	-2.0	6.1	1.3	0.2	-18.9

3	ok 484	0.18	2.86e-02	1.49e-02	7.5	7.5	5.2	5.2	-39.8	0.6	0.9	1.3	3.82e-02	10.4
3	ok 485	0.18	2.75e-02	1.46e-02	7.5	7.5	5.2	5.2	-44.5	-1.4	3.2	1.1	0.1	8.1
3	ok 486	0.18	2.55e-02	1.57e-02	7.5	7.5	5.2	5.2	-46.3	-3.2	9.0	1.2	0.2	-19.8
3	ok 487	0.18	2.49e-02	1.36e-02	7.5	7.5	5.2	5.2	-40.9	-3.0	4.8	1.0	0.2	7.4
3	ok 488	0.18	2.33e-02	1.39e-02	7.5	7.5	5.2	5.2	-39.4	-4.9	10.1	1.0	0.2	-20.0
3	ok 489	0.18	2.21e-02	1.21e-02	7.5	7.5	5.2	5.2	-35.9	-5.0	6.1	0.9	0.2	7.4
3	ok 490	0.18	2.08e-02	1.23e-02	7.5	7.5	5.2	5.2	-33.7	-6.4	9.9	0.7	0.1	-46.7
3	ok 491	0.18	1.88e-02	1.06e-02	7.5	7.5	5.2	5.2	-30.3	-6.4	7.5	0.7	9.39e-02	7.5
3	ok 492	0.18	1.76e-02	1.09e-02	7.5	7.5	5.2	5.2	-27.8	-8.0	10.1	0.5	-4.88e-02	-45.3
3	ok 493	0.18	1.52e-02	9.43e-03	7.5	7.5	5.2	5.2	-20.5	-9.1	-1.4	0.5	-0.1	-13.0
3	ok 494	0.18	1.45e-02	9.58e-03	7.5	7.5	5.2	5.2	-22.5	-9.3	11.2	0.4	-0.2	-44.2
3	ok 495	0.18	1.27e-02	8.49e-03	7.5	7.5	5.2	5.2	-16.5	-11.1	-1.2	0.3	-0.3	-12.0
3	ok 496	0.18	2.08e-02	8.52e-03	7.5	7.5	5.2	5.2	-17.9	-10.2	9.6	0.2	-0.6	-41.9
3	ok 497	0.18	1.75e-02	7.80e-03	7.5	7.5	5.2	5.2	-16.1	-11.3	8.2	0.2	-0.6	7.5
3	ok 498	0.18	2.85e-02	7.65e-03	7.5	7.5	5.2	5.2	-14.0	-10.9	9.0	7.64e-02	-0.9	-36.9
3	ok 499	0.18	2.95e-02	7.30e-03	7.5	7.5	5.2	5.2	-12.6	-12.1	8.1	3.91e-02	-1.0	-29.1
3	ok 500	0.18	3.81e-02	6.95e-03	7.5	7.5	5.2	5.2	-8.5	-11.0	9.9	-0.2	-1.2	-30.4
3	ok 501	0.18	4.18e-02	7.44e-03	7.5	7.5	5.2	5.2	-9.8	-12.8	9.0	-9.75e-02	-1.3	3.8
3	ok 502	0.18	3.82e-02	6.94e-03	7.5	7.5	5.2	5.2	-8.5	-11.0	-9.9	-0.2	-1.2	30.4
3	ok 503	0.18	4.18e-02	7.45e-03	7.5	7.5	5.2	5.2	-9.9	-12.7	-8.9	-8.09e-02	-1.3	25.5
3	ok 504	0.18	2.85e-02	7.65e-03	7.5	7.5	5.2	5.2	-14.0	-10.9	-9.0	7.52e-02	-0.9	36.9
3	ok 505	0.18	2.95e-02	7.29e-03	7.5	7.5	5.2	5.2	-12.6	-12.1	-8.1	3.91e-02	-1.0	29.1
3	ok 506	0.18	2.08e-02	8.52e-03	7.5	7.5	5.2	5.2	-17.9	-10.2	-9.6	0.2	-0.6	41.9
3	ok 507	0.18	1.75e-02	7.80e-03	7.5	7.5	5.2	5.2	-16.1	-11.3	-8.2	0.2	-0.6	-7.5
3	ok 508	0.18	1.45e-02	9.59e-03	7.5	7.5	5.2	5.2	-22.5	-9.3	-11.2	0.3	-0.2	44.1
3	ok 509	0.18	1.27e-02	8.49e-03	7.5	7.5	5.2	5.2	-16.5	-11.1	1.2	0.3	-0.3	12.0
3	ok 510	0.18	1.77e-02	1.09e-02	7.5	7.5	5.2	5.2	-27.8	-7.7	-11.3	0.6	-1.52e-02	46.5
3	ok 511	0.18	1.52e-02	9.43e-03	7.5	7.5	5.2	5.2	-20.5	-9.1	1.4	0.5	-0.1	13.1
3	ok 512	0.18	2.08e-02	1.23e-02	7.5	7.5	5.2	5.2	-33.7	-6.4	-9.9	0.7	0.1	46.9
3	ok 513	0.18	1.88e-02	1.06e-02	7.5	7.5	5.2	5.2	-30.3	-6.4	-7.5	0.7	9.43e-02	-7.4
3	ok 514	0.18	2.34e-02	1.39e-02	7.5	7.5	5.2	5.2	-39.4	-4.9	-10.0	1.0	0.2	20.1
3	ok 515	0.18	2.20e-02	1.21e-02	7.5	7.5	5.2	5.2	-35.9	-5.0	-6.1	0.9	0.2	-7.4
3	ok 516	0.18	2.56e-02	1.57e-02	7.5	7.5	5.2	5.2	-46.2	-3.2	-9.0	1.2	0.2	19.9
3	ok 517	0.18	2.49e-02	1.36e-02	7.5	7.5	5.2	5.2	-40.9	-3.0	-4.8	1.0	0.2	-7.4
3	ok 518	0.18	2.70e-02	1.71e-02	7.5	7.5	5.2	5.2	-51.4	-2.0	-6.1	1.3	0.2	19.1
3	ok 519	0.18	2.75e-02	1.46e-02	7.5	7.5	5.2	5.2	-44.5	-1.4	-3.2	1.1	0.1	-8.0
3	ok 520	0.18	2.76e-02	1.76e-02	7.5	7.5	5.2	5.2	-53.9	-1.2	-1.7	1.4	4.05e-02	6.4
3	ok 521	0.18	2.86e-02	1.49e-02	7.5	7.5	5.2	5.2	-39.7	0.6	-0.9	1.3	3.83e-02	-10.4
3	ok 522	0.18	3.81e-02	1.39e-02	7.5	7.5	5.2	5.2	-42.5	-0.4	0.8	1.6	1.50e-02	14.9
3	ok 523	0.18	3.62e-02	1.37e-02	7.5	7.5	5.2	5.2	-41.8	-1.3	-0.7	1.5	0.1	16.5
3	ok 524	0.18	5.20e-02	1.55e-02	7.5	7.5	5.2	5.2	-40.4	1.6	2.9	2.2	-6.81e-03	8.1
3	ok 525	0.18	5.43e-02	1.68e-02	7.5	7.5	5.2	5.2	-44.9	-1.1	-8.7	2.1	0.2	29.0
3	ok 526	0.18	3.32e-02	1.22e-02	7.5	7.5	5.2	5.2	-33.9	-4.4	-5.6	1.3	0.2	4.1
3	ok 527	0.18	4.86e-02	1.48e-02	7.5	7.5	5.2	5.2	-31.3	-9.4	-12.1	1.9	0.3	29.4
3	ok 528	0.18	2.98e-02	1.03e-02	7.5	7.5	5.2	5.2	-28.5	-8.1	-6.3	1.1	0.2	5.0
3	ok 529	0.18	4.23e-02	1.09e-02	7.5	7.5	5.2	5.2	-21.4	-15.5	-12.7	1.6	0.3	31.7
3	ok 530	0.18	2.55e-02	8.85e-03	7.5	7.5	5.2	5.2	-23.6	-10.8	-5.5	0.9	8.07e-02	5.8
3	ok 531	0.18	3.72e-02	9.17e-03	7.5	7.5	5.2	5.2	-14.8	-16.3	-8.3	1.3	0.1	33.4
3	ok 532	0.18	2.06e-02	7.92e-03	7.5	7.5	5.2	5.2	-19.5	-12.7	-6.1	0.7	-8.58e-02	6.6
3	ok 533	0.18	3.15e-02	8.51e-03	7.5	7.5	5.2	5.2	-11.7	-16.0	-5.9	1.1	-3.02e-02	34.2
3	ok 534	0.18	1.53e-02	7.65e-03	7.5	7.5	5.2	5.2	-13.3	-13.6	-3.8	0.5	-0.3	7.2
3	ok 535	0.18	2.47e-02	8.24e-03	7.5	7.5	5.2	5.2	-9.9	-16.1	-5.6	0.8	-0.3	34.1
3	ok 536	0.18	1.75e-02	7.70e-03	7.5	7.5	5.2	5.2	-10.3	-14.7	-3.5	0.3	-0.6	7.5
3	ok 537	0.18	1.81e-02	8.15e-03	7.5	7.5	5.2	5.2	-7.5	-16.4	-4.0	0.5	-0.5	33.0
3	ok 538	0.18	2.79e-02	7.80e-03	7.5	7.5	5.2	5.2	-10.5	-13.2	8.1	7.67e-02	-0.9	18.6
3	ok 539	0.18	2.48e-02	8.11e-03	7.5	7.5	5.2	5.2	-4.5	-13.9	-12.5	0.1	-0.7	9.5
3	ok 540	0.18	4.32e-02	7.91e-03	7.5	7.5	5.2	5.2	-5.5	-12.9	-12.3	-0.1	-0.8	-7.9
3	ok 541	0.18	4.11e-02	8.10e-03	7.5	7.5	5.2	5.2	-2.1	-13.7	-12.7	-1.23e-02	-1.0	4.9

3	ok 542	0.18	4.32e-02	7.91e-03	7.5	7.5	5.2	5.2	-3.7	-12.6	12.2	-0.1	-0.8	8.5
3	ok 543	0.18	4.10e-02	8.09e-03	7.5	7.5	5.2	5.2	-2.3	-13.1	13.9	-1.12e-02	-1.0	-4.8
3	ok 544	0.18	2.79e-02	7.80e-03	7.5	7.5	5.2	5.2	-7.8	-15.7	3.4	7.28e-02	-0.9	-6.2
3	ok 545	0.18	2.49e-02	8.11e-03	7.5	7.5	5.2	5.2	-7.9	-17.2	4.3	0.2	-0.8	-27.1
3	ok 546	0.18	1.75e-02	7.70e-03	7.5	7.5	5.2	5.2	-10.3	-14.7	3.5	0.3	-0.6	-7.4
3	ok 547	0.18	1.80e-02	8.15e-03	7.5	7.5	5.2	5.2	-7.5	-16.4	4.0	0.5	-0.5	-33.0
3	ok 548	0.18	1.53e-02	7.66e-03	7.5	7.5	5.2	5.2	-13.3	-13.6	3.8	0.5	-0.3	-7.1
3	ok 549	0.18	2.45e-02	8.24e-03	7.5	7.5	5.2	5.2	-9.8	-16.2	4.2	0.8	-0.3	-34.1
3	ok 550	0.18	2.05e-02	7.92e-03	7.5	7.5	5.2	5.2	-19.5	-12.7	6.1	0.7	-8.62e-02	-6.5
3	ok 551	0.18	3.14e-02	8.51e-03	7.5	7.5	5.2	5.2	-12.1	-16.2	5.2	1.1	-2.94e-02	-34.2
3	ok 552	0.18	2.55e-02	8.85e-03	7.5	7.5	5.2	5.2	-23.6	-10.8	5.5	0.9	8.05e-02	-5.6
3	ok 553	0.18	3.61e-02	9.17e-03	7.5	7.5	5.2	5.2	-14.8	-16.3	8.3	1.3	0.1	-33.3
3	ok 554	0.18	2.98e-02	1.03e-02	7.5	7.5	5.2	5.2	-28.5	-8.1	6.3	1.1	0.2	-4.9
3	ok 555	0.18	4.23e-02	1.10e-02	7.5	7.5	5.2	5.2	-21.4	-15.5	12.7	1.6	0.3	-31.6
3	ok 556	0.18	3.32e-02	1.22e-02	7.5	7.5	5.2	5.2	-34.3	-4.4	5.1	1.3	0.2	-4.3
3	ok 557	0.18	4.86e-02	1.48e-02	7.5	7.5	5.2	5.2	-31.3	-9.4	12.1	1.9	0.3	-29.3
3	ok 558	0.18	3.62e-02	1.37e-02	7.5	7.5	5.2	5.2	-41.8	-1.3	0.7	1.5	0.1	-16.4
3	ok 559	0.18	5.43e-02	1.68e-02	7.5	7.5	5.2	5.2	-44.9	-1.1	8.7	2.1	0.2	-28.9
3	ok 560	0.18	3.81e-02	1.39e-02	7.5	7.5	5.2	5.2	-42.5	-0.4	-0.8	1.6	1.51e-02	-14.9
3	ok 561	0.18	5.20e-02	1.55e-02	7.5	7.5	5.2	5.2	-40.4	1.6	-2.9	2.2	-6.80e-03	-8.0
3	ok 562	0.18	0.1	3.28e-02	7.5	7.5	5.2	5.2	-98.2	-2.3	-13.8	3.6	-6.21e-03	24.6
3	ok 563	0.18	8.49e-02	7.21e-02	7.5	7.5	5.2	5.2	-147.6	-71.0	-100.1	3.7	0.2	127.9
3	ok 564	0.18	0.1	0.2	7.5	7.5	5.2	5.2	-482.0	-83.6	-187.6	7.8	0.2	127.4
3	ok 565	0.18	0.2	9.79e-03	7.5	7.5	5.2	5.2	2.5	-16.0	-19.9	5.9	0.9	138.9
3	ok 566	0.18	7.66e-02	1.85e-02	7.5	7.5	5.2	5.2	-11.3	-43.3	-21.4	3.1	0.5	106.2
3	ok 567	0.18	0.1	4.21e-03	7.5	7.5	5.2	5.2	23.8	-2.6	1.4	4.3	0.7	125.4
3	ok 568	0.18	6.77e-02	1.08e-02	7.5	7.5	5.2	5.2	-5.8	-26.1	-6.6	2.5	0.4	113.2
3	ok 569	0.18	9.31e-02	4.75e-03	7.5	7.5	5.2	5.2	-2.5	-11.8	-0.4	3.6	0.6	114.1
3	ok 570	0.18	5.53e-02	8.59e-03	7.5	7.5	5.2	5.2	-7.6	-19.2	-5.6	2.0	0.3	107.6
3	ok 571	0.18	7.40e-02	6.83e-03	7.5	7.5	5.2	5.2	-9.4	-16.0	-5.5	2.7	0.5	116.8
3	ok 572	0.18	4.79e-02	7.99e-03	7.5	7.5	5.2	5.2	-7.6	-17.3	-3.3	1.6	9.86e-02	105.2
3	ok 573	0.18	4.96e-02	7.80e-03	7.5	7.5	5.2	5.2	-7.4	-18.3	-3.9	1.7	0.2	108.4
3	ok 574	0.18	4.24e-02	7.97e-03	7.5	7.5	5.2	5.2	-9.6	-17.6	-3.9	1.1	-0.1	73.1
3	ok 575	0.18	4.76e-02	7.81e-03	7.5	7.5	5.2	5.2	-5.3	-16.2	-10.8	1.0	9.95e-02	49.5
3	ok 576	0.18	3.34e-02	8.06e-03	7.5	7.5	5.2	5.2	-3.1	-13.4	-10.6	0.4	-0.3	45.1
3	ok 577	0.18	3.44e-02	7.98e-03	7.5	7.5	5.2	5.2	-3.0	-15.4	-12.8	-3.86e-02	-0.1	42.0
3	ok 578	0.18	2.60e-02	8.12e-03	7.5	7.5	5.2	5.2	-2.0	-12.8	-13.6	7.19e-02	-0.5	38.9
3	ok 579	0.18	2.13e-02	7.51e-03	7.5	7.5	5.2	5.2	-1.5	-13.5	-13.3	-0.4	-0.2	30.1
3	ok 580	0.18	3.15e-02	7.95e-03	7.5	7.5	5.2	5.2	-1.9	-13.9	-13.1	0.1	-0.6	19.6
3	ok 581	0.18	1.94e-02	6.75e-03	7.5	7.5	5.2	5.2	1.2	-13.3	-11.6	-0.4	-0.5	12.9
3	ok 582	0.18	1.45e-02	5.14e-03	7.5	7.5	5.2	5.2	1.3	-9.6	9.0	-0.2	8.22e-02	11.3
3	ok 583	0.18	3.15e-02	7.92e-03	7.5	7.5	5.2	5.2	1.0	-13.4	11.4	0.2	-0.7	-32.6
3	ok 584	0.18	1.93e-02	6.62e-03	7.5	7.5	5.2	5.2	1.8	-13.0	11.5	-0.4	-0.5	-11.2
3	ok 585	0.18	2.54e-02	8.10e-03	7.5	7.5	5.2	5.2	-1.8	-12.8	13.8	7.11e-02	-0.5	-39.1
3	ok 586	0.18	2.14e-02	7.38e-03	7.5	7.5	5.2	5.2	-1.4	-13.5	12.8	-0.4	-0.2	-31.3
3	ok 587	0.18	3.31e-02	8.07e-03	7.5	7.5	5.2	5.2	-8.0	-17.6	4.4	0.7	-0.3	-64.3
3	ok 588	0.18	3.41e-02	7.99e-03	7.5	7.5	5.2	5.2	-4.6	-16.0	11.4	0.3	-5.65e-02	-41.5
3	ok 589	0.18	4.23e-02	7.97e-03	7.5	7.5	5.2	5.2	-9.7	-17.7	5.5	1.1	-0.1	-73.4
3	ok 590	0.18	4.75e-02	7.82e-03	7.5	7.5	5.2	5.2	-5.3	-16.2	10.8	0.9	9.64e-02	-49.6
3	ok 591	0.18	4.78e-02	8.00e-03	7.5	7.5	5.2	5.2	-10.5	-18.4	3.8	1.5	6.99e-02	-77.6
3	ok 592	0.18	4.97e-02	7.81e-03	7.5	7.5	5.2	5.2	-4.6	-16.1	11.1	1.6	0.2	-61.8
3	ok 593	0.18	5.55e-02	8.59e-03	7.5	7.5	5.2	5.2	-6.6	-18.6	2.7	2.0	0.3	-107.6
3	ok 594	0.18	7.42e-02	6.86e-03	7.5	7.5	5.2	5.2	-9.4	-16.0	5.5	2.7	0.5	-116.8
3	ok 595	0.18	6.78e-02	1.09e-02	7.5	7.5	5.2	5.2	-5.8	-26.1	6.6	2.5	0.4	-113.2
3	ok 596	0.18	9.32e-02	4.75e-03	7.5	7.5	5.2	5.2	1.3	-11.0	5.5	3.6	0.6	-115.4
3	ok 597	0.18	7.67e-02	1.86e-02	7.5	7.5	5.2	5.2	-11.3	-43.3	21.4	3.1	0.5	-106.1
3	ok 598	0.18	0.1	4.21e-03	7.5	7.5	5.2	5.2	23.8	-2.6	-1.5	4.3	0.7	-125.6
3	ok 599	0.18	8.50e-02	7.22e-02	7.5	7.5	5.2	5.2	-147.7	-71.0	100.2	3.7	0.2	-127.9

3	ok 600	0.18	0.2	9.80e-03	7.5	7.5	5.2	5.2	2.5	-16.0	20.0	5.9	0.9	-139.0
3	ok 601	0.18	0.1	3.28e-02	7.5	7.5	5.2	5.2	-98.2	-2.3	13.8	3.6	-6.26e-03	-24.6
3	ok 602	0.18	0.1	0.2	7.5	7.5	5.2	5.2	-482.1	-83.8	187.6	7.9	0.2	-127.3

M_S	x/d	verif.	ver. rid	Af pr-Af	pr+Af	sec-Af	sec+	N z	N o	N zo	M z	M o	M zo
								-482.09	-83.75	-187.58	-1.00	-1.47	-139.02
	0.18	0.17	0.18	7.54	7.54	5.24	5.24	23.81	2.80	187.64	7.85	0.85	138.95

M_S	Nodo	x/d	verif.	ver. rid	Af pr-Af	pr+Af	sec-Af	sec+	N z	N o	N zo	M z	M o	M zo
									kN/ m	kN/ m	kN/ m	kN	kN	kN
6	ok 895	0.18	9.35e-02	4.80e-02	7.5	7.5	5.2	5.2	-140.5	-24.9	26.9	-3.7	-0.2	71.2
6	ok 896	0.18	6.76e-02	3.90e-02	7.5	7.5	5.2	5.2	-118.4	-4.5	10.1	-2.2	9.45e-03	39.8
6	ok 897	0.18	6.91e-02	2.78e-02	7.5	7.5	5.2	5.2	-76.0	-8.5	12.7	-2.1	-0.3	91.6
6	ok 898	0.18	8.86e-02	2.82e-02	7.5	7.5	5.2	5.2	-75.2	-15.7	18.3	-2.9	-0.5	115.9
6	ok 899	0.18	4.13e-02	2.43e-02	7.5	7.5	5.2	5.2	-74.3	-2.5	3.6	-1.5	-2.93e-02	30.6
6	ok 900	0.18	4.17e-02	2.26e-02	7.5	7.5	5.2	5.2	-66.7	-3.2	11.9	-1.4	-0.2	53.2
6	ok 901	0.18	6.40e-02	2.18e-02	7.5	7.5	5.2	5.2	-58.8	-8.9	12.9	-1.9	-0.3	89.0
6	ok 902	0.18	7.58e-02	2.27e-02	7.5	7.5	5.2	5.2	-62.8	-11.6	15.8	-2.5	-0.5	95.5
6	ok 903	0.18	3.87e-02	1.89e-02	7.5	7.5	5.2	5.2	-53.7	-5.2	13.9	-1.2	-0.2	54.8
6	ok 904	0.18	5.72e-02	1.85e-02	7.5	7.5	5.2	5.2	-47.7	-9.5	13.8	-1.5	-0.3	93.5
6	ok 905	0.18	6.43e-02	1.79e-02	7.5	7.5	5.2	5.2	-47.1	-8.5	14.4	-1.7	-0.3	102.0
6	ok 906	0.18	3.61e-02	1.64e-02	7.5	7.5	5.2	5.2	-43.4	-5.0	17.0	-1.1	-0.2	55.6
6	ok 907	0.18	5.19e-02	1.54e-02	7.5	7.5	5.2	5.2	-36.6	-8.8	12.1	-1.2	-0.2	95.0
6	ok 908	0.18	5.46e-02	1.41e-02	7.5	7.5	5.2	5.2	-34.4	-5.4	17.4	-1.3	-0.3	84.6
6	ok 909	0.18	3.22e-02	1.42e-02	7.5	7.5	5.2	5.2	-35.3	-7.5	16.6	-0.9	-0.1	54.2
6	ok 910	0.18	4.63e-02	1.32e-02	7.5	7.5	5.2	5.2	-29.8	-9.0	17.4	-0.9	-0.1	92.6
6	ok 911	0.18	4.93e-02	1.19e-02	7.5	7.5	5.2	5.2	-28.5	-3.3	15.6	-1.1	-0.2	89.8
6	ok 912	0.18	2.72e-02	1.23e-02	7.5	7.5	5.2	5.2	-28.4	-8.9	15.8	-0.6	-1.97e-02	53.5
6	ok 913	0.18	4.12e-02	1.11e-02	7.5	7.5	5.2	5.2	-23.3	-6.7	11.5	-0.6	4.45e-02	85.5
6	ok 914	0.18	4.21e-02	9.96e-03	7.5	7.5	5.2	5.2	-21.4	-1.5	9.7	-0.7	-0.1	83.9
6	ok 915	0.18	2.21e-02	1.06e-02	7.5	7.5	5.2	5.2	-22.4	-9.7	14.6	-0.5	0.1	52.1
6	ok 916	0.18	3.64e-02	9.26e-03	7.5	7.5	5.2	5.2	-16.8	-6.9	15.1	-0.3	0.2	77.0
6	ok 917	0.18	3.90e-02	7.51e-03	7.5	7.5	5.2	5.2	-14.0	0.3	9.6	-0.5	-6.27e-02	71.3
6	ok 918	0.18	2.01e-02	9.14e-03	7.5	7.5	5.2	5.2	-14.6	-8.6	13.2	-0.3	0.5	44.0
6	ok 919	0.18	3.11e-02	7.59e-03	7.5	7.5	5.2	5.2	-15.1	-6.1	11.4	0.7	0.5	38.5
6	ok 920	0.18	3.40e-02	6.31e-03	7.5	7.5	5.2	5.2	-12.1	2.7	12.2	0.5	0.2	30.8
6	ok 921	0.18	2.53e-02	7.81e-03	7.5	7.5	5.2	5.2	-10.2	-8.6	11.8	-0.1	0.7	36.2
6	ok 922	0.18	2.89e-02	6.72e-03	7.5	7.5	5.2	5.2	-12.9	-6.5	9.9	0.9	0.7	17.7
6	ok 923	0.18	3.07e-02	5.24e-03	7.5	7.5	5.2	5.2	-9.0	3.5	3.6	0.5	0.2	15.8
6	ok 924	0.18	3.68e-02	6.69e-03	7.5	7.5	5.2	5.2	-6.7	-9.2	11.1	9.23e-02	1.0	26.0
6	ok 925	0.18	3.64e-02	6.43e-03	7.5	7.5	5.2	5.2	-15.5	-7.0	-7.0	1.0	0.6	2.0
6	ok 926	0.18	2.64e-02	2.64e-03	7.5	7.5	5.2	5.2	-7.6	3.2	-2.4	0.6	0.2	-3.3
6	ok 927	0.18	4.62e-02	6.12e-03	7.5	7.5	5.2	5.2	-6.8	-8.9	6.6	0.1	1.0	7.0
6	ok 928	0.18	2.90e-02	6.73e-03	7.5	7.5	5.2	5.2	-12.9	-6.6	-10.0	0.9	0.7	-17.6
6	ok 929	0.18	3.06e-02	5.23e-03	7.5	7.5	5.2	5.2	-9.0	3.5	-3.7	0.5	0.2	-16.0
6	ok 930	0.18	3.67e-02	6.70e-03	7.5	7.5	5.2	5.2	-9.8	-10.0	-10.0	0.1	1.0	-26.2
6	ok 931	0.18	3.11e-02	7.63e-03	7.5	7.5	5.2	5.2	-15.6	-5.8	-6.0	0.7	0.5	-37.5
6	ok 932	0.18	3.40e-02	6.33e-03	7.5	7.5	5.2	5.2	-12.2	2.8	-12.3	0.5	0.2	-31.2
6	ok 933	0.18	2.52e-02	7.80e-03	7.5	7.5	5.2	5.2	-10.2	-8.6	-11.8	-0.1	0.7	-36.2
6	ok 934	0.18	3.64e-02	9.32e-03	7.5	7.5	5.2	5.2	-17.6	-6.3	-10.0	-0.3	0.2	-74.4
6	ok 935	0.18	3.91e-02	7.68e-03	7.5	7.5	5.2	5.2	-14.5	0.2	-9.4	-0.5	-6.86e-02	-73.9
6	ok 936	0.18	2.00e-02	9.13e-03	7.5	7.5	5.2	5.2	-14.6	-8.5	-13.1	-0.3	0.5	-44.1
6	ok 937	0.18	4.12e-02	1.11e-02	7.5	7.5	5.2	5.2	-23.5	-7.8	-15.9	-0.6	1.77e-02	-88.3
6	ok 938	0.18	4.24e-02	1.01e-02	7.5	7.5	5.2	5.2	-22.6	-1.5	-15.1	-0.8	-0.1	-80.6
6	ok 939	0.18	2.17e-02	1.06e-02	7.5	7.5	5.2	5.2	-22.3	-9.7	-14.6	-0.4	0.1	-51.4
6	ok 940	0.18	4.61e-02	1.28e-02	7.5	7.5	5.2	5.2	-28.4	-7.6	-10.8	-0.8	-6.85e-02	-93.0
6	ok 941	0.18	4.71e-02	1.14e-02	7.5	7.5	5.2	5.2	-27.1	-1.0	-10.1	-0.9	-0.2	-88.9
6	ok 942	0.18	2.77e-02	1.23e-02	7.5	7.5	5.2	5.2	-28.2	-8.9	-15.7	-0.7	-2.36e-02	-54.3

6	ok 943	0.18	5.11e-02	1.55e-02	7.5	7.5	5.2	5.2	-37.1	-10.0	-18.9	-1.2	-0.2	-92.7
6	ok 944	0.18	5.57e-02	1.37e-02	7.5	7.5	5.2	5.2	-33.5	-5.2	-17.1	-1.4	-0.3	-93.5
6	ok 945	0.18	3.21e-02	1.42e-02	7.5	7.5	5.2	5.2	-33.5	-7.4	-16.3	-0.9	-0.2	-52.3
6	ok 946	0.18	5.75e-02	1.86e-02	7.5	7.5	5.2	5.2	-47.3	-9.2	-14.0	-1.5	-0.3	-93.8
6	ok 947	0.18	6.46e-02	1.82e-02	7.5	7.5	5.2	5.2	-47.5	-8.5	-14.4	-1.8	-0.3	-102.2
6	ok 948	0.18	3.59e-02	1.64e-02	7.5	7.5	5.2	5.2	-43.4	-5.0	-17.0	-1.0	-0.2	-55.2
6	ok 949	0.18	6.42e-02	2.18e-02	7.5	7.5	5.2	5.2	-58.8	-7.3	-21.0	-1.9	-0.3	-94.3
6	ok 950	0.18	7.59e-02	2.28e-02	7.5	7.5	5.2	5.2	-62.9	-11.6	-15.8	-2.5	-0.5	-95.4
6	ok 951	0.18	3.87e-02	1.89e-02	7.5	7.5	5.2	5.2	-53.7	-5.2	-13.9	-1.2	-0.2	-54.6
6	ok 952	0.18	6.92e-02	2.78e-02	7.5	7.5	5.2	5.2	-76.0	-8.5	-12.6	-2.1	-0.3	-91.8
6	ok 953	0.18	8.86e-02	2.82e-02	7.5	7.5	5.2	5.2	-75.3	-15.7	-18.3	-2.9	-0.5	-115.7
6	ok 954	0.18	4.18e-02	2.26e-02	7.5	7.5	5.2	5.2	-66.8	-3.2	-12.0	-1.4	-0.2	-53.2
6	ok 955	0.18	6.77e-02	3.90e-02	7.5	7.5	5.2	5.2	-118.5	-4.5	-10.1	-2.2	9.31e-03	-40.0
6	ok 956	0.18	9.32e-02	4.80e-02	7.5	7.5	5.2	5.2	-140.4	-24.9	-26.8	-3.7	-0.2	-74.6
6	ok 957	0.18	4.13e-02	2.43e-02	7.5	7.5	5.2	5.2	-74.3	-2.5	-3.6	-1.5	-3.00e-02	-30.6
6	ok 958	0.18	2.86e-02	1.85e-02	7.5	7.5	5.2	5.2	-56.6	-1.3	-1.8	-1.2	-2.30e-02	1.9
6	ok 959	0.18	2.70e-02	1.78e-02	7.5	7.5	5.2	5.2	-53.4	-2.1	-7.2	-1.2	-0.1	-36.7
6	ok 960	0.18	2.84e-02	1.50e-02	7.5	7.5	5.2	5.2	-38.6	0.6	-1.0	-1.3	1.40e-02	4.8
6	ok 961	0.18	2.72e-02	1.48e-02	7.5	7.5	5.2	5.2	-37.8	0.1	-4.1	-1.2	-0.1	2.5
6	ok 962	0.18	2.47e-02	1.65e-02	7.5	7.5	5.2	5.2	-47.7	-3.5	-10.9	-1.1	-0.2	-36.6
6	ok 963	0.18	2.46e-02	1.38e-02	7.5	7.5	5.2	5.2	-35.0	-1.7	-6.5	-1.1	-0.2	2.2
6	ok 964	0.18	2.24e-02	1.45e-02	7.5	7.5	5.2	5.2	-40.2	-5.3	-12.3	-0.9	-0.2	-37.1
6	ok 965	0.18	2.18e-02	1.25e-02	7.5	7.5	5.2	5.2	-31.0	-3.9	-8.2	-0.9	-0.2	2.2
6	ok 966	0.18	1.98e-02	1.28e-02	7.5	7.5	5.2	5.2	-33.0	-6.1	-13.8	-0.8	-0.1	-37.3
6	ok 967	0.18	1.85e-02	1.11e-02	7.5	7.5	5.2	5.2	-26.3	-5.5	-9.5	-0.8	-0.1	2.3
6	ok 968	0.18	1.63e-02	1.13e-02	7.5	7.5	5.2	5.2	-26.8	-8.5	-12.6	-0.5	3.35e-02	-36.0
6	ok 969	0.18	1.48e-02	9.96e-03	7.5	7.5	5.2	5.2	-21.5	-8.0	-10.2	-0.5	4.76e-02	2.1
6	ok 970	0.18	1.43e-02	9.99e-03	7.5	7.5	5.2	5.2	-21.3	-9.7	-13.3	-0.4	0.2	-34.8
6	ok 971	0.18	1.22e-02	9.03e-03	7.5	7.5	5.2	5.2	-16.9	-9.2	-11.2	-0.4	0.2	2.6
6	ok 972	0.18	1.90e-02	8.85e-03	7.5	7.5	5.2	5.2	-16.5	-10.4	-11.3	-0.2	0.6	-32.2
6	ok 973	0.18	1.70e-02	8.26e-03	7.5	7.5	5.2	5.2	-15.5	-11.1	-10.2	-0.2	0.6	4.0
6	ok 974	0.18	2.76e-02	7.88e-03	7.5	7.5	5.2	5.2	-12.7	-10.9	-10.3	-5.90e-02	0.9	-27.2
6	ok 975	0.18	2.76e-02	7.63e-03	7.5	7.5	5.2	5.2	-12.0	-11.9	-9.6	-3.09e-02	1.0	4.9
6	ok 976	0.18	3.91e-02	7.03e-03	7.5	7.5	5.2	5.2	-7.3	-11.0	-11.0	0.2	1.2	-21.0
6	ok 977	0.18	4.15e-02	7.63e-03	7.5	7.5	5.2	5.2	-9.3	-12.5	-10.0	8.07e-02	1.3	-15.6
6	ok 978	0.18	4.92e-02	7.04e-03	7.5	7.5	5.2	5.2	-10.4	-11.8	-6.3	0.3	1.5	-1.8
6	ok 979	0.18	5.26e-02	7.66e-03	7.5	7.5	5.2	5.2	-4.1	-11.4	13.7	0.1	1.0	11.4
6	ok 980	0.18	2.86e-02	1.85e-02	7.5	7.5	5.2	5.2	-56.5	-1.3	1.8	-1.2	-2.33e-02	-1.9
6	ok 981	0.18	2.71e-02	1.78e-02	7.5	7.5	5.2	5.2	-53.4	-2.1	7.2	-1.2	-0.1	36.8
6	ok 982	0.18	2.84e-02	1.50e-02	7.5	7.5	5.2	5.2	-38.6	0.6	1.0	-1.3	1.40e-02	-4.8
6	ok 983	0.18	2.73e-02	1.48e-02	7.5	7.5	5.2	5.2	-37.8	0.1	4.1	-1.2	-0.1	-2.5
6	ok 984	0.18	2.47e-02	1.65e-02	7.5	7.5	5.2	5.2	-47.7	-3.5	10.9	-1.1	-0.2	36.7
6	ok 985	0.18	2.47e-02	1.38e-02	7.5	7.5	5.2	5.2	-35.1	-1.7	6.5	-1.1	-0.2	-2.1
6	ok 986	0.18	2.25e-02	1.45e-02	7.5	7.5	5.2	5.2	-40.2	-5.3	12.3	-0.9	-0.2	37.1
6	ok 987	0.18	2.18e-02	1.25e-02	7.5	7.5	5.2	5.2	-31.0	-3.9	8.2	-0.9	-0.2	-2.1
6	ok 988	0.18	1.97e-02	1.28e-02	7.5	7.5	5.2	5.2	-33.0	-6.1	13.9	-0.7	-0.1	35.9
6	ok 989	0.18	1.86e-02	1.11e-02	7.5	7.5	5.2	5.2	-26.3	-5.4	9.5	-0.8	-0.1	-2.3
6	ok 990	0.18	1.65e-02	1.13e-02	7.5	7.5	5.2	5.2	-26.8	-8.4	12.7	-0.5	3.23e-02	35.9
6	ok 991	0.18	1.48e-02	9.97e-03	7.5	7.5	5.2	5.2	-21.5	-7.5	10.6	-0.6	1.92e-02	-2.4
6	ok 992	0.18	1.42e-02	1.00e-02	7.5	7.5	5.2	5.2	-21.3	-9.7	13.4	-0.4	0.2	34.6
6	ok 993	0.18	1.22e-02	9.04e-03	7.5	7.5	5.2	5.2	-16.9	-9.2	11.3	-0.4	0.2	-2.6
6	ok 994	0.18	1.90e-02	8.86e-03	7.5	7.5	5.2	5.2	-16.6	-10.4	11.4	-0.2	0.6	32.1
6	ok 995	0.18	1.70e-02	8.27e-03	7.5	7.5	5.2	5.2	-15.5	-11.1	10.2	-0.2	0.6	-3.9
6	ok 996	0.18	2.76e-02	7.89e-03	7.5	7.5	5.2	5.2	-12.7	-10.9	10.3	-5.76e-02	0.9	27.2
6	ok 997	0.18	2.77e-02	7.64e-03	7.5	7.5	5.2	5.2	-12.0	-11.9	9.7	-3.07e-02	1.0	-4.8
6	ok 998	0.18	3.92e-02	7.04e-03	7.5	7.5	5.2	5.2	-7.3	-11.0	11.0	0.2	1.2	21.0
6	ok 999	0.18	4.15e-02	7.63e-03	7.5	7.5	5.2	5.2	-9.3	-12.5	10.0	8.12e-02	1.3	15.6
6	ok 1000	0.18	5.35e-02	8.03e-03	7.5	7.5	5.2	5.2	-5.4	-12.8	-14.1	0.3	1.6	-10.7

6	ok 1001	0.18	4.18e-02	8.19e-03	7.5	7.5	5.2	5.2	-7.9	-13.3	-9.5	6.04e-02	1.3	11.3
6	ok 1002	0.18	4.96e-02	8.10e-03	7.5	7.5	5.2	5.2	-3.8	-13.5	-14.3	0.2	1.3	5.8
6	ok 1003	0.18	3.92e-02	8.49e-03	7.5	7.5	5.2	5.2	-2.6	-12.9	15.4	-1.90e-03	1.0	11.9
6	ok 1004	0.18	2.72e-02	7.93e-03	7.5	7.5	5.2	5.2	-10.4	-12.7	-8.6	-6.33e-02	0.9	13.9
6	ok 1005	0.18	2.43e-02	8.41e-03	7.5	7.5	5.2	5.2	-4.6	-12.9	15.5	-0.1	0.7	17.0
6	ok 1006	0.18	1.79e-02	7.64e-03	7.5	7.5	5.2	5.2	-10.5	-14.6	1.9	-0.3	0.6	10.8
6	ok 1007	0.18	1.72e-02	8.28e-03	7.5	7.5	5.2	5.2	-8.0	-16.1	3.5	-0.5	0.5	33.3
6	ok 1008	0.18	1.45e-02	7.78e-03	7.5	7.5	5.2	5.2	-13.5	-13.2	3.2	-0.5	0.3	10.6
6	ok 1009	0.18	2.25e-02	8.16e-03	7.5	7.5	5.2	5.2	-10.4	-15.4	4.9	-0.7	0.3	34.3
6	ok 1010	0.18	1.94e-02	8.32e-03	7.5	7.5	5.2	5.2	-21.2	-8.3	-8.2	-0.7	3.83e-03	16.1
6	ok 1011	0.18	2.79e-02	8.17e-03	7.5	7.5	5.2	5.2	-12.8	-15.0	5.5	-0.9	3.52e-02	34.5
6	ok 1012	0.18	2.38e-02	9.13e-03	7.5	7.5	5.2	5.2	-25.7	-6.8	-6.6	-0.9	-0.1	16.0
6	ok 1013	0.18	3.33e-02	8.49e-03	7.5	7.5	5.2	5.2	-15.6	-14.7	5.8	-1.2	-0.1	34.5
6	ok 1014	0.18	2.80e-02	1.03e-02	7.5	7.5	5.2	5.2	-30.7	-4.7	-4.9	-1.1	-0.2	15.7
6	ok 1015	0.18	3.73e-02	9.68e-03	7.5	7.5	5.2	5.2	-20.4	-12.7	10.1	-1.4	-0.2	33.2
6	ok 1016	0.18	3.12e-02	1.17e-02	7.5	7.5	5.2	5.2	-35.6	-2.7	-3.1	-1.3	-0.2	15.1
6	ok 1017	0.18	4.22e-02	1.26e-02	7.5	7.5	5.2	5.2	-28.7	-7.9	9.0	-1.6	-0.3	31.2
6	ok 1018	0.18	3.41e-02	1.28e-02	7.5	7.5	5.2	5.2	-39.1	-1.8	-1.8	-1.4	-0.2	14.5
6	ok 1019	0.18	4.58e-02	1.43e-02	7.5	7.5	5.2	5.2	-37.0	-10.7	11.9	-1.8	-0.2	34.9
6	ok 1020	0.18	3.60e-02	1.29e-02	7.5	7.5	5.2	5.2	-39.5	-0.5	-0.9	-1.5	-1.56e-02	9.1
6	ok 1021	0.18	4.59e-02	1.30e-02	7.5	7.5	5.2	5.2	-33.0	1.6	-2.6	-1.9	2.94e-03	8.9
6	ok 1022	0.18	4.18e-02	8.19e-03	7.5	7.5	5.2	5.2	-5.1	-12.4	-15.0	0.1	1.2	3.6
6	ok 1023	0.18	3.94e-02	8.49e-03	7.5	7.5	5.2	5.2	-3.8	-13.1	-15.9	1.03e-02	1.0	-9.3
6	ok 1024	0.18	2.72e-02	7.93e-03	7.5	7.5	5.2	5.2	-10.4	-12.7	8.6	-6.34e-02	0.9	-13.8
6	ok 1025	0.18	2.43e-02	8.41e-03	7.5	7.5	5.2	5.2	-4.6	-12.9	-15.5	-0.1	0.7	-17.0
6	ok 1026	0.18	1.79e-02	7.64e-03	7.5	7.5	5.2	5.2	-10.5	-14.6	-1.8	-0.3	0.6	-10.8
6	ok 1027	0.18	1.74e-02	8.28e-03	7.5	7.5	5.2	5.2	-8.0	-16.1	-3.5	-0.5	0.5	-33.3
6	ok 1028	0.18	1.46e-02	7.79e-03	7.5	7.5	5.2	5.2	-13.5	-13.2	-3.2	-0.5	0.3	-10.6
6	ok 1029	0.18	2.27e-02	8.16e-03	7.5	7.5	5.2	5.2	-10.4	-15.4	-4.9	-0.7	0.3	-34.2
6	ok 1030	0.18	1.94e-02	8.32e-03	7.5	7.5	5.2	5.2	-21.2	-8.6	7.7	-0.7	1.24e-02	-15.9
6	ok 1031	0.18	2.80e-02	8.17e-03	7.5	7.5	5.2	5.2	-12.8	-15.0	-5.5	-0.9	3.48e-02	-34.4
6	ok 1032	0.18	2.39e-02	9.14e-03	7.5	7.5	5.2	5.2	-25.7	-6.8	6.6	-0.9	-0.1	-16.0
6	ok 1033	0.18	3.34e-02	8.49e-03	7.5	7.5	5.2	5.2	-15.6	-14.7	-5.8	-1.2	-0.1	-34.4
6	ok 1034	0.18	2.81e-02	1.03e-02	7.5	7.5	5.2	5.2	-30.7	-4.7	4.9	-1.1	-0.2	-15.6
6	ok 1035	0.18	3.73e-02	9.68e-03	7.5	7.5	5.2	5.2	-20.4	-12.6	-10.1	-1.4	-0.2	-33.2
6	ok 1036	0.18	3.13e-02	1.18e-02	7.5	7.5	5.2	5.2	-35.6	-2.7	3.1	-1.3	-0.2	-15.0
6	ok 1037	0.18	4.23e-02	1.26e-02	7.5	7.5	5.2	5.2	-28.7	-7.9	-8.9	-1.6	-0.3	-31.2
6	ok 1038	0.18	3.41e-02	1.28e-02	7.5	7.5	5.2	5.2	-39.1	-1.8	1.8	-1.4	-0.2	-14.5
6	ok 1039	0.18	4.58e-02	1.43e-02	7.5	7.5	5.2	5.2	-36.9	-10.7	-11.9	-1.8	-0.2	-34.8
6	ok 1040	0.18	3.60e-02	1.29e-02	7.5	7.5	5.2	5.2	-39.5	-0.5	0.9	-1.5	-1.58e-02	-9.0
6	ok 1041	0.18	4.59e-02	1.30e-02	7.5	7.5	5.2	5.2	-33.0	1.5	2.6	-1.9	2.90e-03	-8.9
6	ok 1042	0.18	2.89e-02	8.12e-03	7.5	7.5	5.2	5.2	2.5	-14.9	11.9	-0.4	0.6	0.3
6	ok 1043	0.18	3.01e-02	8.43e-03	7.5	7.5	5.2	5.2	0.4	-13.5	13.2	-0.2	0.7	30.5
6	ok 1044	0.18	1.93e-02	6.45e-03	7.5	7.5	5.2	5.2	0.7	-9.4	-10.7	0.4	-7.91e-02	11.9
6	ok 1045	0.18	2.11e-02	7.11e-03	7.5	7.5	5.2	5.2	1.3	-13.2	11.2	0.6	0.5	9.7
6	ok 1046	0.18	2.37e-02	8.52e-03	7.5	7.5	5.2	5.2	-3.4	-13.6	15.8	-9.64e-02	0.5	28.5
6	ok 1047	0.18	2.40e-02	7.97e-03	7.5	7.5	5.2	5.2	-2.3	-14.6	13.4	0.6	0.3	25.6
6	ok 1048	0.18	2.90e-02	8.48e-03	7.5	7.5	5.2	5.2	-8.8	-17.9	4.3	-0.6	0.4	60.5
6	ok 1049	0.18	2.96e-02	8.55e-03	7.5	7.5	5.2	5.2	-4.1	-16.6	12.5	0.2	0.1	40.1
6	ok 1050	0.18	3.89e-02	8.33e-03	7.5	7.5	5.2	5.2	-10.6	-17.9	3.7	-0.9	0.1	68.5
6	ok 1051	0.18	4.06e-02	8.67e-03	7.5	7.5	5.2	5.2	-6.2	-17.8	12.0	-1.1	-0.1	41.5
6	ok 1052	0.18	4.35e-02	8.15e-03	7.5	7.5	5.2	5.2	-8.6	-17.1	2.6	-1.4	-8.14e-02	99.3
6	ok 1053	0.18	4.55e-02	8.55e-03	7.5	7.5	5.2	5.2	-9.0	-20.7	4.7	-1.5	-0.2	101.9
6	ok 1054	0.18	5.00e-02	8.43e-03	7.5	7.5	5.2	5.2	-8.7	-18.4	5.9	-1.8	-0.3	100.5
6	ok 1055	0.18	6.72e-02	7.48e-03	7.5	7.5	5.2	5.2	-8.5	-19.2	4.9	-2.5	-0.4	110.3
6	ok 1056	0.18	5.81e-02	1.03e-02	7.5	7.5	5.2	5.2	-7.4	-23.5	6.0	-2.2	-0.4	104.7
6	ok 1057	0.18	8.53e-02	6.20e-03	7.5	7.5	5.2	5.2	-4.6	-16.2	2.6	-3.4	-0.6	104.6
6	ok 1058	0.18	6.59e-02	1.64e-02	7.5	7.5	5.2	5.2	-9.6	-33.4	18.8	-2.7	-0.4	99.8

6	ok 1059	0.18	9.62e-02	5.55e-03	7.5	7.5	5.2	5.2	21.7	-9.0	1.4	-3.9	-0.6	107.0
6	ok 1060	0.18	7.66e-02	5.78e-02	7.5	7.5	5.2	5.2	-119.5	-53.1	80.8	-3.5	-0.2	118.8
6	ok 1061	0.18	0.1	1.34e-02	7.5	7.5	5.2	5.2	-6.9	-20.6	24.6	-4.8	-0.6	110.7
6	ok 1062	0.18	8.26e-02	2.63e-02	7.5	7.5	5.2	5.2	-78.6	-2.3	11.7	-3.2	1.13e-02	24.0
6	ok 1063	0.18	0.1	0.1	7.5	7.5	5.2	5.2	-382.7	-71.1	151.1	-7.1	-0.1	130.3
6	ok 1064	0.18	3.02e-02	8.54e-03	7.5	7.5	5.2	5.2	-2.5	-14.1	-14.7	-0.1	0.6	-20.5
6	ok 1065	0.18	2.19e-02	7.36e-03	7.5	7.5	5.2	5.2	0.6	-14.2	-12.6	0.5	0.5	-9.1
6	ok 1066	0.18	2.38e-02	8.47e-03	7.5	7.5	5.2	5.2	-3.5	-13.2	-15.9	-9.78e-02	0.5	-28.2
6	ok 1067	0.18	2.39e-02	7.95e-03	7.5	7.5	5.2	5.2	-2.0	-14.7	-13.5	0.6	0.3	-26.3
6	ok 1068	0.18	2.94e-02	8.47e-03	7.5	7.5	5.2	5.2	-4.9	-13.9	-14.9	-0.2	0.3	-33.9
6	ok 1069	0.18	2.97e-02	8.52e-03	7.5	7.5	5.2	5.2	-4.1	-16.6	-12.4	0.2	0.1	-40.1
6	ok 1070	0.18	3.68e-02	8.33e-03	7.5	7.5	5.2	5.2	-10.7	-18.0	-5.3	-0.9	0.1	-68.7
6	ok 1071	0.18	4.06e-02	8.63e-03	7.5	7.5	5.2	5.2	-6.1	-17.8	-12.0	-1.1	-0.1	-41.7
6	ok 1072	0.18	4.35e-02	8.15e-03	7.5	7.5	5.2	5.2	-8.6	-17.1	-2.6	-1.4	-8.18e-02	-99.2
6	ok 1073	0.18	4.55e-02	8.54e-03	7.5	7.5	5.2	5.2	-9.0	-20.7	-4.7	-1.5	-0.2	-101.9
6	ok 1074	0.18	5.00e-02	8.43e-03	7.5	7.5	5.2	5.2	-8.7	-18.4	-5.9	-1.8	-0.3	-100.5
6	ok 1075	0.18	6.72e-02	7.48e-03	7.5	7.5	5.2	5.2	-8.5	-19.2	-4.9	-2.5	-0.4	-110.2
6	ok 1076	0.18	5.81e-02	1.03e-02	7.5	7.5	5.2	5.2	-7.0	-23.5	-6.3	-2.1	-0.4	-103.9
6	ok 1077	0.18	8.53e-02	6.19e-03	7.5	7.5	5.2	5.2	-4.6	-16.2	-2.6	-3.4	-0.6	-104.5
6	ok 1078	0.18	6.59e-02	1.64e-02	7.5	7.5	5.2	5.2	-9.6	-33.3	-18.8	-2.7	-0.4	-99.8
6	ok 1079	0.18	9.62e-02	5.55e-03	7.5	7.5	5.2	5.2	22.4	-8.6	-1.3	-3.9	-0.6	-106.3
6	ok 1080	0.18	7.66e-02	5.78e-02	7.5	7.5	5.2	5.2	-119.5	-53.0	-80.7	-3.5	-0.2	-118.7
6	ok 1081	0.18	0.1	1.34e-02	7.5	7.5	5.2	5.2	-6.9	-20.7	-24.6	-4.9	-0.6	-110.8
6	ok 1082	0.18	8.25e-02	2.63e-02	7.5	7.5	5.2	5.2	-78.5	-2.3	-11.7	-3.2	1.14e-02	-24.0
6	ok 1083	0.18	0.1	0.1	7.5	7.5	5.2	5.2	-382.5	-70.9	-151.0	-7.1	-0.1	-130.2

M_S	x/d	verif.	ver. rid	Af pr-	Af pr+	Af sec-	Af sec+	N z	N o	N zo	M z	M o	M zo
								-382.67	-71.12	-151.03	-7.08	-0.63	-130.17
	0.18	0.12	0.15	7.54	7.54	5.24	5.24	22.37	3.53	151.11	1.00	1.63	130.32

M_S	Nodo	x/d	verif.	ver. rid	Af pr-	Af pr+	Af sec-	Af sec+	N z	N o	N zo	M z	M o	M zo
									kN/ m	kN/ m	kN/ m	kN	kN	kN
7	ok 1084	0.18	8.40e-02	8.94e-02	7.5	7.5	5.2	5.2	-260.2	-42.9	-53.5	2.2	0.2	40.8
7	ok 1085	0.18	6.11e-02	5.95e-02	7.5	7.5	5.2	5.2	-180.4	-5.9	-16.4	2.4	2.44e-02	77.1
7	ok 1086	0.18	5.82e-02	4.10e-02	7.5	7.5	5.2	5.2	-98.5	-22.2	-25.6	2.2	0.4	136.8
7	ok 1087	0.18	6.81e-02	3.29e-02	7.5	7.5	5.2	5.2	-74.3	-17.2	-38.2	3.1	0.5	98.1
7	ok 1088	0.18	3.91e-02	3.41e-02	7.5	7.5	5.2	5.2	-103.9	-3.2	-5.8	2.0	0.1	48.8
7	ok 1089	0.18	4.25e-02	3.09e-02	7.5	7.5	5.2	5.2	-90.4	-5.3	-18.3	1.8	0.3	83.8
7	ok 1090	0.18	6.38e-02	2.62e-02	7.5	7.5	5.2	5.2	-62.9	-20.3	-29.5	2.4	0.5	136.1
7	ok 1091	0.18	7.87e-02	2.13e-02	7.5	7.5	5.2	5.2	-58.4	-6.2	-19.4	3.2	0.7	140.6
7	ok 1092	0.18	3.82e-02	2.43e-02	7.5	7.5	5.2	5.2	-67.1	-9.4	-19.5	1.3	0.4	85.6
7	ok 1093	0.18	5.48e-02	2.03e-02	7.5	7.5	5.2	5.2	-50.6	-19.3	-19.9	1.9	0.5	119.9
7	ok 1094	0.18	6.33e-02	1.64e-02	7.5	7.5	5.2	5.2	-43.3	-1.7	-13.0	2.1	0.4	145.6
7	ok 1095	0.18	3.67e-02	1.98e-02	7.5	7.5	5.2	5.2	-51.0	-12.0	-17.6	1.2	0.4	80.7
7	ok 1096	0.18	4.88e-02	1.63e-02	7.5	7.5	5.2	5.2	-39.3	-13.0	-10.6	1.4	0.3	129.5
7	ok 1097	0.18	5.01e-02	1.25e-02	7.5	7.5	5.2	5.2	-34.5	8.36e-02	-11.2	1.3	0.3	140.4
7	ok 1098	0.18	3.30e-02	1.65e-02	7.5	7.5	5.2	5.2	-40.6	-12.6	-18.6	1.1	0.2	79.3
7	ok 1099	0.18	4.21e-02	1.38e-02	7.5	7.5	5.2	5.2	-34.6	-11.7	-14.6	1.1	9.53e-02	125.0
7	ok 1100	0.18	4.29e-02	1.32e-02	7.5	7.5	5.2	5.2	-34.7	-1.3	-14.7	0.8	0.1	140.2
7	ok 1101	0.18	2.70e-02	1.42e-02	7.5	7.5	5.2	5.2	-32.8	-12.3	-14.5	0.8	-6.42e-02	78.0
7	ok 1102	0.18	3.05e-02	1.25e-02	7.5	7.5	5.2	5.2	-29.1	-7.7	-11.0	0.5	-0.2	115.9
7	ok 1103	0.18	3.26e-02	1.14e-02	7.5	7.5	5.2	5.2	-27.5	1.92e-02	-9.0	2.83e-02	-4.79e-02	129.9
7	ok 1104	0.18	2.28e-02	1.23e-02	7.5	7.5	5.2	5.2	-26.9	-11.7	-14.0	0.6	-0.3	72.5
7	ok 1105	0.18	3.09e-02	1.09e-02	7.5	7.5	5.2	5.2	-24.3	-7.0	-11.3	0.2	-0.5	99.4
7	ok 1106	0.18	3.69e-02	9.67e-03	7.5	7.5	5.2	5.2	-22.7	1.3	-9.9	-0.6	-0.2	108.3
7	ok 1107	0.18	2.93e-02	1.09e-02	7.5	7.5	5.2	5.2	-21.5	-10.3	-13.3	0.3	-0.8	70.2
7	ok 1108	0.18	3.30e-02	9.03e-03	7.5	7.5	5.2	5.2	-14.9	-4.7	-14.2	-0.1	-0.8	67.2
7	ok 1109	0.18	4.20e-02	7.26e-03	7.5	7.5	5.2	5.2	-15.7	3.2	-10.1	-1.1	-0.4	83.4

7	ok 1110	0.18	3.76e-02	9.71e-03	7.5	7.5	5.2	5.2	-17.4	-9.7	-12.8	0.1	-1.1	60.7
7	ok 1111	0.18	3.49e-02	8.60e-03	7.5	7.5	5.2	5.2	-12.1	-1.7	-14.2	-0.3	-1.1	42.7
7	ok 1112	0.18	4.25e-02	7.35e-03	7.5	7.5	5.2	5.2	-11.9	4.9	0.8	-1.9	-0.5	-36.4
7	ok 1113	0.18	4.62e-02	8.82e-03	7.5	7.5	5.2	5.2	-13.6	-9.7	-12.3	-0.2	-1.5	45.7
7	ok 1114	0.18	2.21e-02	8.33e-03	7.5	7.5	5.2	5.2	-8.7	-2.2	14.0	-0.2	-0.7	-18.0
7	ok 1115	0.18	5.41e-02	8.52e-03	7.5	7.5	5.2	5.2	-20.7	5.9	8.9	-2.1	-6.89e-02	-29.6
7	ok 1116	0.18	4.63e-02	8.30e-03	7.5	7.5	5.2	5.2	-7.8	-9.9	14.9	-0.3	-1.6	-11.2
7	ok 1117	0.18	3.53e-02	8.58e-03	7.5	7.5	5.2	5.2	-12.1	-1.8	14.1	-0.3	-1.1	-42.7
7	ok 1118	0.18	4.21e-02	7.38e-03	7.5	7.5	5.2	5.2	-16.9	4.1	8.2	-2.0	-0.6	-8.6
7	ok 1119	0.18	4.66e-02	8.79e-03	7.5	7.5	5.2	5.2	-13.6	-9.7	12.2	-0.2	-1.5	-45.6
7	ok 1120	0.18	3.30e-02	9.06e-03	7.5	7.5	5.2	5.2	-16.2	-4.7	14.1	-0.1	-0.8	-67.0
7	ok 1121	0.18	4.15e-02	7.21e-03	7.5	7.5	5.2	5.2	-15.6	3.2	10.2	-1.1	-0.4	-83.8
7	ok 1122	0.18	3.78e-02	9.65e-03	7.5	7.5	5.2	5.2	-17.5	-9.7	12.6	0.1	-1.1	-60.7
7	ok 1123	0.18	3.07e-02	1.12e-02	7.5	7.5	5.2	5.2	-24.7	-6.9	11.4	0.2	-0.5	-99.9
7	ok 1124	0.18	3.72e-02	9.89e-03	7.5	7.5	5.2	5.2	-22.4	1.1	9.7	-0.5	-0.2	-114.1
7	ok 1125	0.18	2.96e-02	1.09e-02	7.5	7.5	5.2	5.2	-21.6	-10.3	13.1	0.3	-0.8	-70.8
7	ok 1126	0.18	3.30e-02	1.22e-02	7.5	7.5	5.2	5.2	-29.8	-9.0	14.2	0.6	-0.2	-121.4
7	ok 1127	0.18	3.15e-02	1.23e-02	7.5	7.5	5.2	5.2	-31.4	-0.5	14.9	0.2	-2.23e-02	-127.0
7	ok 1128	0.18	2.26e-02	1.23e-02	7.5	7.5	5.2	5.2	-26.6	-11.7	13.6	0.6	-0.4	-74.3
7	ok 1129	0.18	4.00e-02	1.34e-02	7.5	7.5	5.2	5.2	-32.3	-9.8	8.8	0.9	-9.16e-03	-130.8
7	ok 1130	0.18	4.01e-02	1.10e-02	7.5	7.5	5.2	5.2	-29.9	0.7	9.8	0.6	8.33e-02	-139.5
7	ok 1131	0.18	2.85e-02	1.42e-02	7.5	7.5	5.2	5.2	-32.8	-12.4	14.4	0.9	-7.03e-02	-75.0
7	ok 1132	0.18	4.79e-02	1.62e-02	7.5	7.5	5.2	5.2	-40.9	-15.2	16.4	1.4	0.3	-128.9
7	ok 1133	0.18	5.23e-02	1.36e-02	7.5	7.5	5.2	5.2	-36.1	-1.4	14.6	1.4	0.3	-143.5
7	ok 1134	0.18	3.36e-02	1.65e-02	7.5	7.5	5.2	5.2	-40.4	-12.7	18.7	1.2	0.2	-78.7
7	ok 1135	0.18	5.57e-02	2.04e-02	7.5	7.5	5.2	5.2	-50.5	-19.1	19.8	1.9	0.5	-123.9
7	ok 1136	0.18	6.44e-02	1.65e-02	7.5	7.5	5.2	5.2	-43.9	-1.7	12.9	2.1	0.4	-151.8
7	ok 1137	0.18	3.77e-02	1.99e-02	7.5	7.5	5.2	5.2	-51.4	-12.1	17.8	1.4	0.3	-79.6
7	ok 1138	0.18	6.43e-02	2.63e-02	7.5	7.5	5.2	5.2	-63.1	-20.2	17.2	2.5	0.6	-121.3
7	ok 1139	0.18	8.06e-02	2.13e-02	7.5	7.5	5.2	5.2	-58.7	-6.2	18.9	3.2	0.7	-148.0
7	ok 1140	0.18	3.99e-02	2.43e-02	7.5	7.5	5.2	5.2	-67.1	-9.4	19.4	1.5	0.4	-84.0
7	ok 1141	0.18	6.28e-02	4.08e-02	7.5	7.5	5.2	5.2	-97.6	-22.5	25.2	2.4	0.4	-138.4
7	ok 1142	0.18	7.21e-02	3.22e-02	7.5	7.5	5.2	5.2	-87.7	-13.5	29.2	3.4	0.7	-96.3
7	ok 1143	0.18	4.32e-02	3.08e-02	7.5	7.5	5.2	5.2	-90.4	-5.2	18.3	1.8	0.3	-82.6
7	ok 1144	0.18	6.12e-02	5.96e-02	7.5	7.5	5.2	5.2	-180.7	-6.0	16.9	2.7	5.04e-02	-76.8
7	ok 1145	0.18	8.44e-02	9.00e-02	7.5	7.5	5.2	5.2	-262.0	-43.0	53.6	2.7	0.2	-54.7
7	ok 1146	0.18	4.06e-02	3.40e-02	7.5	7.5	5.2	5.2	-103.5	-3.0	5.7	2.1	0.1	-47.1
7	ok 1147	0.18	3.23e-02	2.55e-02	7.5	7.5	5.2	5.2	-78.1	-1.6	2.6	1.7	6.78e-02	-3.7
7	ok 1148	0.18	3.65e-02	2.43e-02	7.5	7.5	5.2	5.2	-72.8	-3.1	9.9	1.6	0.2	-56.2
7	ok 1149	0.18	3.79e-02	2.14e-02	7.5	7.5	5.2	5.2	-55.7	0.8	1.5	1.9	5.48e-02	-1.2
7	ok 1150	0.18	3.81e-02	2.03e-02	7.5	7.5	5.2	5.2	-52.9	3.95e-02	5.1	1.8	0.2	-15.4
7	ok 1151	0.18	3.41e-02	2.17e-02	7.5	7.5	5.2	5.2	-62.8	-5.5	14.6	1.5	0.3	-55.1
7	ok 1152	0.18	3.50e-02	1.84e-02	7.5	7.5	5.2	5.2	-47.4	-1.7	8.0	1.6	0.3	-14.8
7	ok 1153	0.18	3.05e-02	1.83e-02	7.5	7.5	5.2	5.2	-50.4	-8.1	15.6	1.2	0.3	-54.6
7	ok 1154	0.18	3.15e-02	1.61e-02	7.5	7.5	5.2	5.2	-40.6	-5.4	10.3	1.4	0.3	-14.0
7	ok 1155	0.18	2.68e-02	1.56e-02	7.5	7.5	5.2	5.2	-39.8	-9.0	16.9	1.0	0.2	-54.4
7	ok 1156	0.18	2.73e-02	1.38e-02	7.5	7.5	5.2	5.2	-33.4	-7.1	11.8	1.2	0.2	-14.0
7	ok 1157	0.18	2.22e-02	1.35e-02	7.5	7.5	5.2	5.2	-31.7	-11.5	15.0	0.8	-0.1	-23.9
7	ok 1158	0.18	2.23e-02	1.22e-02	7.5	7.5	5.2	5.2	-26.7	-9.9	13.1	0.9	-9.95e-02	-14.2
7	ok 1159	0.18	2.17e-02	1.20e-02	7.5	7.5	5.2	5.2	-25.1	-12.2	16.0	0.6	-0.3	-24.5
7	ok 1160	0.18	1.85e-02	1.10e-02	7.5	7.5	5.2	5.2	-20.7	-11.1	13.8	0.6	-0.5	-15.0
7	ok 1161	0.18	2.98e-02	1.08e-02	7.5	7.5	5.2	5.2	-19.8	-12.2	14.2	0.3	-0.9	-26.4
7	ok 1162	0.18	2.86e-02	1.02e-02	7.5	7.5	5.2	5.2	-15.7	-11.8	14.3	0.3	-0.9	-15.6
7	ok 1163	0.18	4.08e-02	9.87e-03	7.5	7.5	5.2	5.2	-15.6	-12.1	13.8	2.81e-02	-1.3	-43.6
7	ok 1164	0.18	4.16e-02	9.59e-03	7.5	7.5	5.2	5.2	-11.8	-12.1	14.4	-1.53e-02	-1.5	-14.9
7	ok 1165	0.18	5.42e-02	9.13e-03	7.5	7.5	5.2	5.2	-9.4	-11.8	14.5	-0.2	-1.9	-27.4
7	ok 1166	0.18	6.02e-02	8.96e-03	7.5	7.5	5.2	5.2	-9.8	-12.9	13.7	-0.1	-2.1	-10.8
7	ok 1167	0.18	6.25e-02	8.55e-03	7.5	7.5	5.2	5.2	-7.2	-12.3	15.1	-0.4	-2.2	-6.2

7	ok 1168	0.18	7.45e-02	8.76e-03	7.5	7.5	5.2	5.2	-8.4	-13.4	14.7	-0.5	-2.7	-4.0
7	ok 1169	0.18	5.38e-02	9.17e-03	7.5	7.5	5.2	5.2	-9.4	-11.7	-14.6	-0.2	-1.9	27.7
7	ok 1170	0.18	5.99e-02	9.00e-03	7.5	7.5	5.2	5.2	-9.8	-12.9	-13.8	-0.1	-2.1	11.1
7	ok 1171	0.18	4.05e-02	9.91e-03	7.5	7.5	5.2	5.2	-15.6	-12.1	-14.0	2.89e-02	-1.3	43.9
7	ok 1172	0.18	4.13e-02	9.63e-03	7.5	7.5	5.2	5.2	-11.8	-12.1	-14.5	-1.55e-02	-1.5	15.4
7	ok 1173	0.18	2.99e-02	1.08e-02	7.5	7.5	5.2	5.2	-19.9	-12.2	-14.3	0.3	-0.9	27.1
7	ok 1174	0.18	2.87e-02	1.02e-02	7.5	7.5	5.2	5.2	-15.7	-11.8	-14.4	0.3	-0.9	16.2
7	ok 1175	0.18	2.12e-02	1.20e-02	7.5	7.5	5.2	5.2	-25.1	-12.2	-16.1	0.5	-0.3	25.4
7	ok 1176	0.18	1.77e-02	1.11e-02	7.5	7.5	5.2	5.2	-20.6	-10.8	-14.8	0.6	-0.3	15.8
7	ok 1177	0.18	2.23e-02	1.36e-02	7.5	7.5	5.2	5.2	-31.7	-11.4	-15.1	0.8	-9.36e-02	24.8
7	ok 1178	0.18	2.25e-02	1.22e-02	7.5	7.5	5.2	5.2	-26.7	-9.8	-13.2	0.9	-9.45e-02	15.3
7	ok 1179	0.18	2.64e-02	1.56e-02	7.5	7.5	5.2	5.2	-39.8	-9.0	-17.0	1.0	0.2	55.5
7	ok 1180	0.18	2.74e-02	1.38e-02	7.5	7.5	5.2	5.2	-33.3	-7.0	-11.9	1.2	0.2	15.5
7	ok 1181	0.18	3.02e-02	1.83e-02	7.5	7.5	5.2	5.2	-50.4	-8.1	-15.7	1.2	0.3	56.0
7	ok 1182	0.18	3.16e-02	1.61e-02	7.5	7.5	5.2	5.2	-40.6	-5.4	-10.3	1.4	0.3	15.6
7	ok 1183	0.18	3.40e-02	2.17e-02	7.5	7.5	5.2	5.2	-62.7	-5.5	-14.6	1.4	0.3	57.0
7	ok 1184	0.18	3.52e-02	1.84e-02	7.5	7.5	5.2	5.2	-47.3	-1.7	-8.0	1.6	0.3	16.5
7	ok 1185	0.18	3.62e-02	2.43e-02	7.5	7.5	5.2	5.2	-72.8	-3.1	-10.0	1.6	0.2	58.4
7	ok 1186	0.18	3.82e-02	2.03e-02	7.5	7.5	5.2	5.2	-52.8	4.06e-02	-5.1	1.8	0.2	17.1
7	ok 1187	0.18	3.34e-02	2.56e-02	7.5	7.5	5.2	5.2	-78.1	-1.6	-2.7	1.7	6.94e-02	32.6
7	ok 1188	0.18	3.78e-02	2.14e-02	7.5	7.5	5.2	5.2	-55.6	0.8	-1.5	1.9	5.56e-02	2.1
7	ok 1189	0.18	5.48e-02	1.91e-02	7.5	7.5	5.2	5.2	-58.4	-0.7	-1.3	2.5	3.33e-02	-4.2
7	ok 1190	0.18	5.17e-02	1.80e-02	7.5	7.5	5.2	5.2	-54.8	-2.0	-2.3	2.4	0.3	-5.7
7	ok 1191	0.18	8.53e-02	2.08e-02	7.5	7.5	5.2	5.2	-63.7	0.2	1.8	3.5	-1.89e-02	-4.1
7	ok 1192	0.18	8.38e-02	1.96e-02	7.5	7.5	5.2	5.2	-57.2	-1.2	7.9	3.4	0.3	-28.4
7	ok 1193	0.18	4.73e-02	1.58e-02	7.5	7.5	5.2	5.2	-47.7	-3.2	-2.6	2.1	0.3	-8.2
7	ok 1194	0.18	7.62e-02	1.64e-02	7.5	7.5	5.2	5.2	-42.7	-9.1	13.2	3.0	0.4	-34.0
7	ok 1195	0.18	4.23e-02	1.34e-02	7.5	7.5	5.2	5.2	-39.6	-5.5	-6.7	1.9	0.4	-9.9
7	ok 1196	0.18	6.73e-02	1.18e-02	7.5	7.5	5.2	5.2	-30.6	-12.2	8.5	2.6	0.4	-38.7
7	ok 1197	0.18	3.58e-02	1.15e-02	7.5	7.5	5.2	5.2	-28.0	-7.1	-8.3	1.7	0.2	-15.8
7	ok 1198	0.18	5.81e-02	9.42e-03	7.5	7.5	5.2	5.2	-19.4	-13.3	6.0	2.1	0.2	-44.1
7	ok 1199	0.18	2.82e-02	1.03e-02	7.5	7.5	5.2	5.2	-21.9	-8.7	-10.4	1.3	-2.24e-02	-16.7
7	ok 1200	0.18	4.78e-02	8.47e-03	7.5	7.5	5.2	5.2	-19.5	-8.7	-9.5	1.8	6.58e-02	-57.9
7	ok 1201	0.18	2.02e-02	9.60e-03	7.5	7.5	5.2	5.2	-16.6	-9.5	-12.5	0.9	-0.3	-16.0
7	ok 1202	0.18	3.61e-02	8.13e-03	7.5	7.5	5.2	5.2	-11.6	-8.6	-10.6	1.4	-0.2	-69.2
7	ok 1203	0.18	2.39e-02	9.17e-03	7.5	7.5	5.2	5.2	-12.5	-10.9	-13.1	0.5	-0.8	-13.1
7	ok 1204	0.18	2.49e-02	7.97e-03	7.5	7.5	5.2	5.2	-8.5	-9.0	-11.9	0.8	-0.7	-62.3
7	ok 1205	0.18	4.06e-02	8.89e-03	7.5	7.5	5.2	5.2	-9.3	-11.6	-13.7	8.18e-02	-1.4	-8.7
7	ok 1206	0.18	3.72e-02	7.86e-03	7.5	7.5	5.2	5.2	-6.0	-9.1	-12.9	0.3	-1.2	-49.3
7	ok 1207	0.18	6.21e-02	8.72e-03	7.5	7.5	5.2	5.2	-7.0	-12.1	-13.9	-0.2	-2.2	-5.2
7	ok 1208	0.18	5.80e-02	7.76e-03	7.5	7.5	5.2	5.2	-4.2	-10.8	-13.5	-0.2	-2.1	-31.8
7	ok 1209	0.18	8.16e-02	8.55e-03	7.5	7.5	5.2	5.2	-4.4	-12.3	14.9	-0.5	-2.9	8.4
7	ok 1210	0.18	8.41e-02	7.68e-03	7.5	7.5	5.2	5.2	-2.8	-8.8	14.6	-0.5	-2.9	14.9
7	ok 1211	0.18	6.24e-02	8.69e-03	7.5	7.5	5.2	5.2	-7.0	-12.2	13.8	-0.2	-2.2	5.5
7	ok 1212	0.18	5.82e-02	7.73e-03	7.5	7.5	5.2	5.2	-4.2	-10.8	13.4	-0.1	-2.0	30.3
7	ok 1213	0.18	4.07e-02	8.86e-03	7.5	7.5	5.2	5.2	-9.3	-11.6	13.6	7.78e-02	-1.5	9.3
7	ok 1214	0.18	3.73e-02	7.84e-03	7.5	7.5	5.2	5.2	-5.9	-9.1	12.8	0.3	-1.2	49.5
7	ok 1215	0.18	2.40e-02	9.15e-03	7.5	7.5	5.2	5.2	-12.5	-11.0	13.0	0.5	-0.8	13.8
7	ok 1216	0.18	2.49e-02	7.95e-03	7.5	7.5	5.2	5.2	-8.5	-9.0	11.9	0.8	-0.7	63.0
7	ok 1217	0.18	2.01e-02	9.57e-03	7.5	7.5	5.2	5.2	-16.6	-9.6	12.4	0.9	-0.3	17.0
7	ok 1218	0.18	3.64e-02	8.11e-03	7.5	7.5	5.2	5.2	-11.6	-8.7	10.6	1.4	-0.2	69.6
7	ok 1219	0.18	2.82e-02	1.03e-02	7.5	7.5	5.2	5.2	-21.8	-8.4	10.5	1.3	4.39e-02	17.7
7	ok 1220	0.18	4.77e-02	8.45e-03	7.5	7.5	5.2	5.2	-19.3	-8.0	10.0	1.8	0.1	58.6
7	ok 1221	0.18	3.56e-02	1.15e-02	7.5	7.5	5.2	5.2	-28.0	-7.2	8.2	1.7	0.2	17.5
7	ok 1222	0.18	5.79e-02	9.41e-03	7.5	7.5	5.2	5.2	-19.5	-13.4	-6.1	2.1	0.3	44.8
7	ok 1223	0.18	4.21e-02	1.34e-02	7.5	7.5	5.2	5.2	-39.7	-5.5	6.6	1.9	0.4	11.8
7	ok 1224	0.18	6.69e-02	1.18e-02	7.5	7.5	5.2	5.2	-28.3	-13.1	-10.6	2.5	0.4	40.5
7	ok 1225	0.18	4.72e-02	1.58e-02	7.5	7.5	5.2	5.2	-45.1	-4.4	-4.5	1.9	0.3	-4.6

7	ok 1226	0.18	7.56e-02	1.65e-02	7.5	7.5	5.2	5.2	-41.7	-8.1	-10.4	2.9	0.4	35.1
7	ok 1227	0.18	5.12e-02	1.80e-02	7.5	7.5	5.2	5.2	-54.9	-2.0	2.2	2.4	0.3	7.7
7	ok 1228	0.18	8.40e-02	1.97e-02	7.5	7.5	5.2	5.2	-55.4	-11.0	-13.3	3.2	0.3	38.0
7	ok 1229	0.18	5.47e-02	1.91e-02	7.5	7.5	5.2	5.2	-58.5	-0.7	1.3	2.5	3.60e-02	5.9
7	ok 1230	0.18	8.35e-02	2.09e-02	7.5	7.5	5.2	5.2	-63.9	0.4	-1.8	3.4	-1.49e-02	4.3
7	ok 1231	0.18	6.60e-02	6.76e-03	7.5	7.5	5.2	5.2	0.5	-6.8	-13.4	-0.3	-1.4	-26.5
7	ok 1232	0.18	3.96e-02	6.35e-03	7.5	7.5	5.2	5.2	-3.4	-5.8	14.2	0.1	-0.8	70.9
7	ok 1233	0.18	1.73e-02	4.00e-03	7.5	7.5	5.2	5.2	4.1	2.3	12.9	0.5	-0.2	42.0
7	ok 1234	0.18	3.63e-02	4.31e-03	7.5	7.5	5.2	5.2	0.2	2.3	10.4	0.8	8.94e-02	97.6
7	ok 1235	0.18	3.79e-02	6.27e-03	7.5	7.5	5.2	5.2	-5.4	-5.1	13.4	0.7	-0.6	101.3
7	ok 1236	0.18	4.96e-02	4.37e-03	7.5	7.5	5.2	5.2	-3.1	2.1	12.3	1.1	6.76e-02	139.5
7	ok 1237	0.18	5.42e-02	6.37e-03	7.5	7.5	5.2	5.2	-7.9	-5.3	12.0	1.3	-0.3	118.8
7	ok 1238	0.18	6.61e-02	4.56e-03	7.5	7.5	5.2	5.2	-5.4	2.2	10.9	1.7	0.3	161.9
7	ok 1239	0.18	7.02e-02	6.62e-03	7.5	7.5	5.2	5.2	-10.4	-4.6	11.8	1.9	5.91e-02	133.8
7	ok 1240	0.18	8.31e-02	5.46e-03	7.5	7.5	5.2	5.2	-8.3	1.4	12.0	2.7	0.5	171.2
7	ok 1241	0.18	8.54e-02	6.86e-03	7.5	7.5	5.2	5.2	-13.2	-4.7	10.6	2.6	0.3	137.5
7	ok 1242	0.18	9.47e-02	5.30e-03	7.5	7.5	5.2	5.2	-7.7	2.1	10.8	3.0	0.5	188.6
7	ok 1243	0.18	9.84e-02	7.57e-03	7.5	7.5	5.2	5.2	-7.3	-14.0	-9.7	1.6	0.2	50.4
7	ok 1244	0.18	0.1	5.77e-03	7.5	7.5	5.2	5.2	-13.3	1.5	8.9	4.2	0.8	202.1
7	ok 1245	0.18	0.1	9.75e-03	7.5	7.5	5.2	5.2	-13.5	-19.5	-4.2	4.0	0.6	170.5
7	ok 1246	0.18	0.1	5.76e-03	7.5	7.5	5.2	5.2	-10.0	2.0	11.9	5.5	1.0	209.1
7	ok 1247	0.18	0.1	1.59e-02	7.5	7.5	5.2	5.2	-18.6	-31.8	-17.2	4.9	0.6	159.6
7	ok 1248	0.18	0.2	3.69e-03	7.5	7.5	5.2	5.2	-7.2	2.8	6.5	6.5	1.1	226.4
7	ok 1249	0.18	0.1	6.31e-02	7.5	7.5	5.2	5.2	-140.4	-58.1	-81.0	6.8	0.5	195.6
7	ok 1250	0.18	0.2	7.62e-03	7.5	7.5	5.2	5.2	-7.4	-10.8	-13.3	9.1	1.1	229.6
7	ok 1251	0.18	0.2	3.60e-02	7.5	7.5	5.2	5.2	-108.9	-2.2	-11.3	6.0	1.69e-02	36.8
7	ok 1252	0.18	0.3	0.2	7.5	7.5	5.2	5.2	-429.2	-67.7	-151.0	16.1	0.4	319.1
7	ok 1253	0.18	3.98e-02	6.39e-03	7.5	7.5	5.2	5.2	-0.6	-5.3	-12.8	-0.1	-0.7	-87.5
7	ok 1254	0.18	3.54e-02	4.32e-03	7.5	7.5	5.2	5.2	-1.2	1.9	-13.1	0.5	-8.14e-02	-99.0
7	ok 1255	0.18	3.79e-02	6.29e-03	7.5	7.5	5.2	5.2	-2.7	-4.5	-11.8	0.9	-0.5	-127.6
7	ok 1256	0.18	4.90e-02	4.36e-03	7.5	7.5	5.2	5.2	-2.7	2.2	-12.5	1.1	6.54e-02	-137.3
7	ok 1257	0.18	5.41e-02	6.38e-03	7.5	7.5	5.2	5.2	-3.5	-3.5	-11.7	1.5	-0.2	-151.1
7	ok 1258	0.18	6.61e-02	4.77e-03	7.5	7.5	5.2	5.2	-4.9	1.9	-10.7	1.7	0.3	-162.6
7	ok 1259	0.18	7.07e-02	6.62e-03	7.5	7.5	5.2	5.2	-10.4	-4.4	-11.9	1.9	4.69e-02	-134.8
7	ok 1260	0.18	8.30e-02	5.66e-03	7.5	7.5	5.2	5.2	-8.5	1.2	-12.5	2.6	0.4	-174.5
7	ok 1261	0.18	8.49e-02	6.85e-03	7.5	7.5	5.2	5.2	-13.4	-6.0	-10.2	2.6	0.2	-139.5
7	ok 1262	0.18	9.41e-02	5.20e-03	7.5	7.5	5.2	5.2	-8.7	1.9	-11.1	3.0	0.5	-189.8
7	ok 1263	0.18	9.80e-02	7.55e-03	7.5	7.5	5.2	5.2	-13.7	-12.9	1.9	3.2	0.4	-119.3
7	ok 1264	0.18	0.1	5.52e-03	7.5	7.5	5.2	5.2	-12.6	1.5	-8.7	4.2	0.7	-203.5
7	ok 1265	0.18	0.1	9.64e-03	7.5	7.5	5.2	5.2	-17.2	-17.8	8.3	4.0	0.6	-117.5
7	ok 1266	0.18	0.1	5.64e-03	7.5	7.5	5.2	5.2	-9.8	2.2	-11.7	5.5	1.0	-210.4
7	ok 1267	0.18	0.1	1.61e-02	7.5	7.5	5.2	5.2	-19.3	-35.4	18.2	5.1	0.7	-163.6
7	ok 1268	0.18	0.2	3.67e-03	7.5	7.5	5.2	5.2	-7.9	2.6	-6.5	6.5	1.1	-229.2
7	ok 1269	0.18	0.1	6.16e-02	7.5	7.5	5.2	5.2	-137.0	-57.3	78.9	6.6	0.4	-205.8
7	ok 1270	0.18	0.2	7.81e-03	7.5	7.5	5.2	5.2	7.6	-5.7	16.7	9.6	1.4	-274.0
7	ok 1271	0.18	0.2	3.60e-02	7.5	7.5	5.2	5.2	-108.8	-3.2	11.2	6.1	-3.93e-03	-37.6
7	ok 1272	0.18	0.2	0.2	7.5	7.5	5.2	5.2	-424.8	-71.1	144.8	15.9	0.4	-311.5

M_S	**x/d**	**verif.**	**ver. rid**	**Af pr-**	**Af pr+**	**Af sec-**	**Af sec+**	**N z**	**N o**	**N zo**	**M z**	**M o**	**M zo**
								-429.22	-71.14	-150.97	-2.10	-2.92	-311.45
	0.18	0.25	0.16	7.54	7.54	5.24	5.24	7.63	5.86	144.85	16.11	1.38	319.08

M_S	**Nodo**	**x/d**	**verif.**	**ver. rid**	**Af pr-**	**Af pr+**	**Af sec-**	**Af sec+**	**N z**	**N o**	**N zo**	**M z**	**M o**	**M zo**
									kN/ m	kN/ m	kN/ m	kN	kN	kN
8	ok 925	0.18	1.64e-02	6.44e-03	7.5	7.5	5.2	5.2	9.3	14.6	-18.8	2.17e-02	0.2	-0.4
8	ok 926	0.18	7.22e-03	5.26e-03	7.5	7.5	5.2	5.2	17.9	5.9	-11.7	-2.68e-02	2.49e-02	-5.6
8	ok 927	0.18	2.17e-02	5.10e-03	7.5	7.5	5.2	5.2	4.1	5.6	-20.0	2.67e-02	0.2	1.0
8	ok 978	0.18	2.19e-02	5.67e-03	7.5	7.5	5.2	5.2	0.2	2.9	-16.9	5.06e-02	0.3	4.6

8	ok 979	0.18	2.11e-02	5.69e-03	7.5	7.5	5.2	5.2	-1.4	2.4	-17.3	5.14e-02	0.3	4.8
8	ok 1000	0.18	1.93e-02	5.70e-03	7.5	7.5	5.2	5.2	-0.8	1.9	-16.3	-4.48e-02	-0.3	5.6
8	ok 1002	0.18	1.64e-02	5.83e-03	7.5	7.5	5.2	5.2	1.7	4.5	-14.5	9.79e-04	4.74e-04	3.44e-02
8	ok 1042	0.18	1.10e-02	7.75e-03	7.5	7.5	5.2	5.2	-1.4	-6.0	-19.1	-2.40e-02	-4.76e-02	-6.4
8	ok 1044	0.18	1.86e-02	1.27e-02	7.5	7.5	5.2	5.2	-5.2	-26.2	-18.1	2.08e-03	-3.03e-03	9.67e-02
8	ok 1114	0.18	2.56e-02	9.84e-03	7.5	7.5	5.2	5.2	-16.8	-16.2	-12.7	-2.97e-02	0.3	-3.1
8	ok 1115	0.18	1.29e-02	9.36e-03	7.5	7.5	5.2	5.2	-13.2	-9.0	-16.7	-6.07e-02	3.54e-02	5.1
8	ok 1116	0.18	3.51e-02	4.45e-03	7.5	7.5	5.2	5.2	-5.5	1.8	-6.3	-6.88e-02	-0.4	4.8
8	ok 1167	0.18	3.62e-02	3.50e-03	7.5	7.5	5.2	5.2	-5.6	4.2	-4.3	-7.55e-02	-0.4	4.4
8	ok 1168	0.18	3.61e-02	3.31e-03	7.5	7.5	5.2	5.2	-4.8	4.7	8.7	-1.77e-04	3.26e-04	4.53e-02
8	ok 1209	0.18	3.46e-02	2.75e-03	7.5	7.5	5.2	5.2	-3.2	6.0	8.5	-4.80e-04	-9.79e-04	1.83e-02
8	ok 1210	0.18	3.07e-02	2.02e-03	7.5	7.5	5.2	5.2	-1.3	7.3	7.9	-3.13e-04	-7.92e-04	-1.18e-02
8	ok 1231	0.18	1.96e-02	1.24e-03	7.5	7.5	5.2	5.2	2.6	10.5	6.3	-1.24e-04	7.12e-04	4.32e-02
8	ok 1233	0.18	6.53e-03	1.68e-03	7.5	7.5	5.2	5.2	-1.7	-1.1	3.6	-1.68e-03	5.29e-04	-1.51e-02
8	ok 1273	0.18	2.47e-02	7.21e-03	7.5	7.5	5.2	5.2	-4.9	-14.8	-10.1	-0.3	0.2	5.5
8	ok 1274	0.18	2.76e-02	5.24e-03	7.5	7.5	5.2	5.2	17.1	3.9	14.2	-5.00e-03	-6.45e-04	0.3
8	ok 1275	0.18	3.49e-02	5.73e-03	7.5	7.5	5.2	5.2	-10.5	-0.9	-6.6	-8.32e-02	-0.4	5.3
8	ok 1276	0.18	3.30e-02	1.02e-02	7.5	7.5	5.2	5.2	-22.2	-2.6	15.6	-1.56e-03	-4.28e-04	0.1
8	ok 1277	0.18	3.53e-02	1.07e-02	7.5	7.5	5.2	5.2	-22.4	-5.3	16.1	-3.88e-03	-8.95e-04	0.1
8	ok 1278	0.18	1.59e-02	8.40e-03	7.5	7.5	5.2	5.2	-20.4	0.3	11.4	-5.08e-04	-5.18e-05	5.36e-03
8	ok 1279	0.18	3.85e-02	1.29e-02	7.5	7.5	5.2	5.2	-35.9	-2.5	11.1	-4.50e-03	-1.62e-03	0.2
8	ok 1280	0.18	4.01e-02	1.40e-02	7.5	7.5	5.2	5.2	-36.4	-9.5	13.5	-4.92e-03	-1.08e-03	9.94e-02
8	ok 1281	0.18	2.40e-02	1.07e-02	7.5	7.5	5.2	5.2	-28.9	1.0	10.9	-1.22e-03	-6.50e-04	1.98e-02
8	ok 1282	0.18	4.30e-02	1.54e-02	7.5	7.5	5.2	5.2	-45.6	-2.8	8.1	-5.31e-03	-1.78e-03	0.1
8	ok 1283	0.18	4.36e-02	1.65e-02	7.5	7.5	5.2	5.2	-48.7	-10.5	8.5	-8.98e-03	-1.98e-03	7.82e-02
8	ok 1284	0.18	2.89e-02	1.33e-02	7.5	7.5	5.2	5.2	-39.9	1.2	5.1	-2.82e-03	-1.49e-03	5.62e-02
8	ok 1285	0.18	4.60e-02	1.68e-02	7.5	7.5	5.2	5.2	-50.9	-3.8	5.3	-5.53e-03	-1.65e-03	8.16e-02
8	ok 1286	0.18	4.59e-02	1.78e-02	7.5	7.5	5.2	5.2	-53.3	-11.6	-6.6	-8.23e-03	-1.77e-03	3.02e-02
8	ok 1287	0.18	3.22e-02	1.49e-02	7.5	7.5	5.2	5.2	-45.4	1.1	2.9	-3.31e-03	-1.48e-03	5.59e-02
8	ok 1288	0.18	4.82e-02	1.77e-02	7.5	7.5	5.2	5.2	-53.4	-4.8	-6.3	-5.40e-03	-1.46e-03	4.44e-02
8	ok 1289	0.18	4.77e-02	1.85e-02	7.5	7.5	5.2	5.2	-54.9	-11.7	-8.3	-7.39e-03	-1.55e-03	1.84e-03
8	ok 1290	0.18	3.44e-02	1.59e-02	7.5	7.5	5.2	5.2	-48.4	0.3	-2.1	-3.49e-03	-1.34e-03	4.88e-02
8	ok 1291	0.18	4.91e-02	1.80e-02	7.5	7.5	5.2	5.2	-53.9	-5.6	-7.7	-5.05e-03	-1.27e-03	1.64e-02
8	ok 1292	0.18	4.84e-02	1.86e-02	7.5	7.5	5.2	5.2	-54.8	-11.3	-9.3	-6.70e-03	-1.39e-03	-1.55e-02
8	ok 1293	0.18	3.58e-02	1.63e-02	7.5	7.5	5.2	5.2	-49.7	-0.7	-3.5	-3.45e-03	-1.16e-03	3.90e-02
8	ok 1294	0.18	4.92e-02	1.80e-02	7.5	7.5	5.2	5.2	-53.5	-6.2	-8.4	-4.63e-03	-1.12e-03	-2.71e-03
8	ok 1295	0.18	4.87e-02	1.84e-02	7.5	7.5	5.2	5.2	-54.0	-10.7	-9.9	-6.07e-03	-1.26e-03	-2.75e-02
8	ok 1296	0.18	3.67e-02	1.64e-02	7.5	7.5	5.2	5.2	-49.9	-1.7	-4.5	-3.28e-03	-9.97e-04	3.03e-02
8	ok 1297	0.18	4.91e-02	1.78e-02	7.5	7.5	5.2	5.2	-52.8	-6.6	-8.7	-4.15e-03	-9.61e-04	-1.46e-02
8	ok 1298	0.18	4.87e-02	1.81e-02	7.5	7.5	5.2	5.2	-52.9	-10.1	-10.1	-5.29e-03	-1.09e-03	-3.80e-02
8	ok 1299	0.18	3.70e-02	1.64e-02	7.5	7.5	5.2	5.2	-49.5	-2.6	-5.0	-3.02e-03	-8.34e-04	2.35e-02
8	ok 1300	0.18	4.89e-02	1.76e-02	7.5	7.5	5.2	5.2	-52.0	-6.8	-8.7	-3.61e-03	-7.77e-04	-2.28e-02
8	ok 1301	0.18	4.86e-02	1.78e-02	7.5	7.5	5.2	5.2	-51.9	-9.5	-10.1	-4.45e-03	-8.98e-04	-4.79e-02
8	ok 1302	0.18	3.69e-02	1.62e-02	7.5	7.5	5.2	5.2	-49.1	-3.3	-5.1	-2.73e-03	-6.69e-04	1.79e-02
8	ok 1303	0.18	4.86e-02	1.74e-02	7.5	7.5	5.2	5.2	-51.5	-6.9	-8.5	-3.16e-03	-6.17e-04	-2.82e-02
8	ok 1304	0.18	4.84e-02	1.75e-02	7.5	7.5	5.2	5.2	-51.2	-9.1	-9.9	-3.73e-03	-7.40e-04	-4.37e-02
8	ok 1305	0.18	3.68e-02	1.61e-02	7.5	7.5	5.2	5.2	-48.7	-3.8	-5.0	-2.43e-03	-5.26e-04	1.29e-02
8	ok 1306	0.18	4.82e-02	1.73e-02	7.5	7.5	5.2	5.2	-51.2	-6.9	-8.2	-2.74e-03	-5.07e-04	-2.78e-02
8	ok 1307	0.18	4.81e-02	1.74e-02	7.5	7.5	5.2	5.2	-50.9	-8.8	-9.7	-3.12e-03	-6.07e-04	-3.58e-02
8	ok 1308	0.18	3.66e-02	1.60e-02	7.5	7.5	5.2	5.2	-48.5	-4.1	-4.9	-2.14e-03	-4.19e-04	8.47e-03
8	ok 1309	0.18	4.78e-02	1.73e-02	7.5	7.5	5.2	5.2	-51.3	-7.0	-7.8	-2.36e-03	-4.43e-04	-2.72e-02
8	ok 1310	0.18	4.78e-02	1.74e-02	7.5	7.5	5.2	5.2	-51.0	-8.7	-9.4	-2.80e-03	-5.51e-04	-3.03e-02
8	ok 1311	0.18	3.62e-02	1.61e-02	7.5	7.5	5.2	5.2	-48.6	-4.3	-4.6	-1.85e-03	-3.52e-04	5.75e-03
8	ok 1312	0.18	4.75e-02	1.74e-02	7.5	7.5	5.2	5.2	-51.8	-6.9	-7.5	-2.04e-03	-4.11e-04	-2.62e-02
8	ok 1313	0.18	4.74e-02	1.75e-02	7.5	7.5	5.2	5.2	-51.5	-8.7	-9.1	-2.57e-03	-5.18e-04	-2.88e-02
8	ok 1314	0.18	3.58e-02	1.62e-02	7.5	7.5	5.2	5.2	-49.1	-4.3	-4.4	-1.57e-03	-3.06e-04	5.20e-03
8	ok 1315	0.18	4.70e-02	1.76e-02	7.5	7.5	5.2	5.2	-52.6	-6.7	-7.3	-1.72e-03	-3.63e-04	-2.48e-02
8	ok 1316	0.18	4.69e-02	1.78e-02	7.5	7.5	5.2	5.2	-52.5	-8.8	-8.9	-2.30e-03	-4.73e-04	-3.10e-02

8	ok 1317	0.18	3.52e-02	1.64e-02	7.5	7.5	5.2	5.2	-49.7	-4.0	-4.4	-1.31e-03	-2.50e-04	6.75e-03
8	ok 1318	0.18	4.64e-02	1.79e-02	7.5	7.5	5.2	5.2	-53.7	-6.5	-7.2	-1.37e-03	-2.69e-04	-2.16e-02
8	ok 1319	0.18	4.62e-02	1.81e-02	7.5	7.5	5.2	5.2	-53.7	-9.1	-8.8	-1.72e-03	-3.51e-04	-3.21e-02
8	ok 1320	0.18	3.44e-02	1.67e-02	7.5	7.5	5.2	5.2	-50.5	-3.5	-4.5	-1.05e-03	-1.65e-04	9.35e-03
8	ok 1321	0.18	4.55e-02	1.83e-02	7.5	7.5	5.2	5.2	-54.7	-6.0	-7.4	-9.43e-04	-1.23e-04	-1.77e-02
8	ok 1322	0.18	4.53e-02	1.86e-02	7.5	7.5	5.2	5.2	-55.0	-9.5	-8.9	-1.04e-03	-1.92e-04	-3.91e-02
8	ok 1323	0.18	3.32e-02	1.69e-02	7.5	7.5	5.2	5.2	-51.2	-2.7	-5.0	-8.18e-04	-5.07e-05	1.15e-02
8	ok 1324	0.18	4.41e-02	1.85e-02	7.5	7.5	5.2	5.2	-55.4	-5.2	-8.0	-6.37e-04	8.70e-06	-1.40e-02
8	ok 1325	0.18	4.39e-02	1.90e-02	7.5	7.5	5.2	5.2	-56.1	-9.8	-9.2	-5.01e-04	-6.89e-05	-2.83e-02
8	ok 1326	0.18	3.15e-02	1.70e-02	7.5	7.5	5.2	5.2	-51.4	-1.6	-5.9	-6.16e-04	5.32e-05	1.26e-02
8	ok 1327	0.18	4.22e-02	1.86e-02	7.5	7.5	5.2	5.2	-55.3	-4.2	-9.0	-3.95e-04	9.18e-05	-3.26e-03
8	ok 1328	0.18	4.22e-02	1.92e-02	7.5	7.5	5.2	5.2	-56.5	-9.9	-10.0	-2.51e-05	4.11e-05	-1.32e-02
8	ok 1329	0.18	2.92e-02	1.69e-02	7.5	7.5	5.2	5.2	-50.7	-0.3	-7.2	-4.63e-04	1.21e-04	1.21e-02
8	ok 1330	0.18	3.89e-02	1.83e-02	7.5	7.5	5.2	5.2	-53.6	-2.8	-10.7	-2.78e-04	1.28e-04	6.99e-03
8	ok 1331	0.18	3.93e-02	1.90e-02	7.5	7.5	5.2	5.2	-55.3	-9.5	-11.2	1.81e-04	9.14e-05	2.82e-03
8	ok 1332	0.18	2.61e-02	1.64e-02	7.5	7.5	5.2	5.2	-48.5	1.1	-9.0	-3.70e-04	1.27e-04	1.00e-02
8	ok 1333	0.18	3.43e-02	1.72e-02	7.5	7.5	5.2	5.2	-49.3	-1.1	-12.8	-3.71e-04	6.83e-05	1.31e-02
8	ok 1334	0.18	3.55e-02	1.80e-02	7.5	7.5	5.2	5.2	-51.3	-8.3	-12.8	8.42e-05	7.95e-05	2.10e-02
8	ok 1335	0.18	2.22e-02	1.53e-02	7.5	7.5	5.2	5.2	-44.1	2.3	-10.9	-3.21e-04	4.34e-05	6.44e-03
8	ok 1336	0.18	2.86e-02	1.52e-02	7.5	7.5	5.2	5.2	-31.6	2.9	-14.8	-0.2	-4.09e-02	-6.5
8	ok 1337	0.18	3.09e-02	1.59e-02	7.5	7.5	5.2	5.2	-43.3	-6.0	-14.5	-7.48e-04	-1.56e-04	3.70e-02
8	ok 1338	0.18	1.75e-02	1.33e-02	7.5	7.5	5.2	5.2	-30.4	5.0	-14.9	-0.2	-4.30e-02	7.1
8	ok 1339	0.18	2.29e-02	1.22e-02	7.5	7.5	5.2	5.2	-26.5	7.2	-10.9	0.3	2.79e-02	7.9
8	ok 1340	0.18	2.55e-02	1.25e-02	7.5	7.5	5.2	5.2	-28.1	-3.7	-18.1	0.3	6.55e-02	13.8
8	ok 1341	0.18	1.41e-02	1.09e-02	7.5	7.5	5.2	5.2	-24.9	4.8	-17.6	-0.1	-2.75e-02	3.0
8	ok 1342	0.18	1.57e-02	9.55e-03	7.5	7.5	5.2	5.2	-19.1	10.3	-15.6	-0.1	0.1	-5.1
8	ok 1343	0.18	1.86e-02	1.16e-02	7.5	7.5	5.2	5.2	-19.7	-1.9	-6.7	-0.2	-3.72e-02	-12.5
8	ok 1344	0.18	2.16e-02	9.28e-03	7.5	7.5	5.2	5.2	-8.6	4.5	-17.8	-3.66e-02	-0.3	-4.8
8	ok 1345	0.18	2.20e-02	8.05e-03	7.5	7.5	5.2	5.2	-7.9	3.0	-16.6	5.23e-02	0.3	5.6
8	ok 1346	0.18	2.13e-02	7.77e-03	7.5	7.5	5.2	5.2	-9.7	1.8	-16.5	5.11e-02	0.3	5.8
8	ok 1347	0.18	1.34e-02	1.03e-02	7.5	7.5	5.2	5.2	-20.8	2.4	-18.6	-5.98e-02	6.63e-02	2.3
8	ok 1348	0.18	1.33e-02	9.70e-03	7.5	7.5	5.2	5.2	-17.8	2.8	-19.2	2.05e-02	3.18e-02	3.6
8	ok 1349	0.18	1.53e-02	1.22e-02	7.5	7.5	5.2	5.2	-27.3	4.2	-16.8	-0.1	4.72e-03	1.6
8	ok 1350	0.18	1.43e-02	1.14e-02	7.5	7.5	5.2	5.2	-30.0	3.8	-13.2	-3.33e-05	1.09e-05	2.02e-02
8	ok 1351	0.18	1.73e-02	1.40e-02	7.5	7.5	5.2	5.2	-39.7	3.5	-11.6	-2.09e-04	3.83e-05	1.33e-02
8	ok 1352	0.18	1.61e-02	1.29e-02	7.5	7.5	5.2	5.2	-35.9	3.4	-12.3	-9.53e-05	4.42e-05	1.99e-02
8	ok 1353	0.18	1.85e-02	1.51e-02	7.5	7.5	5.2	5.2	-44.0	2.5	-9.9	-2.88e-04	1.01e-04	1.64e-02
8	ok 1354	0.18	1.72e-02	1.39e-02	7.5	7.5	5.2	5.2	-39.9	2.7	-10.8	-1.64e-04	8.40e-05	2.27e-02
8	ok 1355	0.18	2.06e-02	1.57e-02	7.5	7.5	5.2	5.2	-46.5	1.4	-8.2	-3.78e-04	1.09e-04	2.03e-02
8	ok 1356	0.18	1.78e-02	1.45e-02	7.5	7.5	5.2	5.2	-42.4	1.9	-9.2	-2.34e-04	9.62e-05	2.66e-02
8	ok 1357	0.18	2.30e-02	1.59e-02	7.5	7.5	5.2	5.2	-47.5	0.3	-6.8	-4.90e-04	6.61e-05	2.31e-02
8	ok 1358	0.18	2.01e-02	1.47e-02	7.5	7.5	5.2	5.2	-43.7	1.2	-7.7	-3.11e-04	7.34e-05	3.02e-02
8	ok 1359	0.18	2.49e-02	1.58e-02	7.5	7.5	5.2	5.2	-47.6	-0.7	-5.7	-6.28e-04	-8.62e-06	2.43e-02
8	ok 1360	0.18	2.30e-02	1.47e-02	7.5	7.5	5.2	5.2	-44.1	0.5	-6.4	-4.00e-04	2.48e-05	3.25e-02
8	ok 1361	0.18	2.64e-02	1.56e-02	7.5	7.5	5.2	5.2	-47.3	-1.4	-5.0	-7.89e-04	-9.26e-05	2.40e-02
8	ok 1362	0.18	2.55e-02	1.46e-02	7.5	7.5	5.2	5.2	-44.1	-1.41e-02	-5.5	-5.04e-04	-3.46e-05	3.36e-02
8	ok 1363	0.18	2.76e-02	1.54e-02	7.5	7.5	5.2	5.2	-46.8	-1.9	-4.6	-9.71e-04	-1.65e-04	2.30e-02
8	ok 1364	0.18	2.76e-02	1.45e-02	7.5	7.5	5.2	5.2	-43.8	-0.3	-4.9	-6.22e-04	-9.23e-05	3.40e-02
8	ok 1365	0.18	2.84e-02	1.53e-02	7.5	7.5	5.2	5.2	-46.3	-2.1	-4.4	-1.17e-03	-2.23e-04	2.26e-02
8	ok 1366	0.18	2.93e-02	1.44e-02	7.5	7.5	5.2	5.2	-43.5	-0.3	-4.4	-7.51e-04	-1.45e-04	3.44e-02
8	ok 1367	0.18	2.90e-02	1.52e-02	7.5	7.5	5.2	5.2	-45.9	-2.0	-4.4	-1.37e-03	-2.77e-04	2.37e-02
8	ok 1368	0.18	3.03e-02	1.43e-02	7.5	7.5	5.2	5.2	-43.3	-3.42e-02	-4.2	-8.83e-04	-1.98e-04	3.55e-02
8	ok 1369	0.18	2.94e-02	1.51e-02	7.5	7.5	5.2	5.2	-45.8	-1.7	-4.4	-1.58e-03	-3.46e-04	2.63e-02
8	ok 1370	0.18	3.08e-02	1.42e-02	7.5	7.5	5.2	5.2	-43.2	0.4	-4.0	-1.01e-03	-2.63e-04	3.74e-02
8	ok 1371	0.18	2.95e-02	1.52e-02	7.5	7.5	5.2	5.2	-45.9	-1.2	-4.4	-1.78e-03	-4.42e-04	3.00e-02
8	ok 1372	0.18	3.07e-02	1.42e-02	7.5	7.5	5.2	5.2	-43.2	1.1	-3.8	-1.12e-03	-3.44e-04	3.96e-02
8	ok 1373	0.18	2.94e-02	1.52e-02	7.5	7.5	5.2	5.2	-46.2	-0.5	-4.3	-1.96e-03	-5.64e-04	3.37e-02
8	ok 1374	0.18	2.99e-02	1.43e-02	7.5	7.5	5.2	5.2	-43.1	1.9	-3.9	-1.26e-03	-4.60e-04	4.25e-02

8	ok 1375	0.18	2.89e-02	1.53e-02	7.5	7.5	5.2	5.2	-46.4	0.4	-4.0	-2.12e-03	-7.01e-04	3.69e-02
8	ok 1376	0.18	2.85e-02	1.42e-02	7.5	7.5	5.2	5.2	-43.1	2.9	-3.6	-1.33e-03	-5.70e-04	4.29e-02
8	ok 1377	0.18	2.80e-02	1.52e-02	7.5	7.5	5.2	5.2	-46.4	1.4	-3.4	-2.23e-03	-8.38e-04	3.92e-02
8	ok 1378	0.18	2.63e-02	1.41e-02	7.5	7.5	5.2	5.2	-42.9	3.9	-3.1	-1.35e-03	-6.76e-04	4.11e-02
8	ok 1379	0.18	2.64e-02	1.50e-02	7.5	7.5	5.2	5.2	-45.4	2.6	-3.2	-2.37e-03	-1.02e-03	4.13e-02
8	ok 1380	0.18	2.34e-02	1.38e-02	7.5	7.5	5.2	5.2	-41.9	5.0	-2.4	-1.31e-03	-7.64e-04	3.60e-02
8	ok 1381	0.18	2.44e-02	1.44e-02	7.5	7.5	5.2	5.2	-43.7	3.5	-2.0	-2.29e-03	-1.15e-03	3.91e-02
8	ok 1382	0.18	1.99e-02	1.32e-02	7.5	7.5	5.2	5.2	-40.1	5.8	-1.5	-1.19e-03	-8.20e-04	2.54e-02
8	ok 1383	0.18	2.18e-02	1.35e-02	7.5	7.5	5.2	5.2	-40.4	4.0	2.1	-2.03e-03	-1.21e-03	3.04e-02
8	ok 1384	0.18	1.65e-02	1.22e-02	7.5	7.5	5.2	5.2	-36.8	6.2	2.3	-9.71e-04	-8.02e-04	7.50e-03
8	ok 1385	0.18	1.80e-02	1.19e-02	7.5	7.5	5.2	5.2	-33.2	4.5	4.6	-1.55e-03	-1.05e-03	1.10e-02
8	ok 1386	0.18	1.34e-02	1.08e-02	7.5	7.5	5.2	5.2	-32.5	6.3	4.2	-6.56e-04	-6.08e-04	-1.71e-02
8	ok 1387	0.18	1.27e-02	9.65e-03	7.5	7.5	5.2	5.2	-25.7	3.6	10.4	-6.75e-04	-3.72e-04	-1.34e-02
8	ok 1388	0.18	1.11e-02	8.85e-03	7.5	7.5	5.2	5.2	-23.0	5.7	10.0	-3.41e-04	-1.31e-04	-2.73e-02
8	ok 1389	0.18	1.88e-02	7.64e-03	7.5	7.5	5.2	5.2	-18.9	3.1	10.6	-2.92e-04	1.07e-04	-2.67e-02
8	ok 1390	0.18	2.02e-02	6.95e-03	7.5	7.5	5.2	5.2	-17.2	5.2	10.2	-2.47e-04	1.44e-04	-3.57e-02
8	ok 1391	0.18	3.64e-02	5.52e-03	7.5	7.5	5.2	5.2	-11.9	2.8	9.6	6.80e-05	9.81e-04	-1.69e-02
8	ok 1392	0.18	3.64e-02	5.10e-03	7.5	7.5	5.2	5.2	-10.9	4.8	9.6	-2.21e-04	4.48e-04	-1.90e-02
8	ok 1393	0.18	1.96e-02	7.63e-03	7.5	7.5	5.2	5.2	-10.2	3.4	-15.4	2.14e-05	1.36e-04	2.20e-02
8	ok 1394	0.18	1.71e-02	8.10e-03	7.5	7.5	5.2	5.2	-9.0	-0.7	-18.9	6.36e-03	5.92e-02	5.5
8	ok 1395	0.18	1.36e-02	9.18e-03	7.5	7.5	5.2	5.2	-20.5	3.2	-13.4	6.03e-05	7.97e-05	2.31e-02
8	ok 1396	0.18	1.39e-02	9.12e-03	7.5	7.5	5.2	5.2	-13.5	-2.1	-17.2	3.56e-02	5.57e-02	6.6
8	ok 1397	0.18	1.36e-02	1.06e-02	7.5	7.5	5.2	5.2	-27.1	2.6	-13.6	5.66e-05	3.64e-05	2.29e-02
8	ok 1398	0.18	1.51e-02	1.01e-02	7.5	7.5	5.2	5.2	-23.9	-8.77e-02	-14.1	1.50e-04	2.90e-05	2.40e-02
8	ok 1399	0.18	1.50e-02	1.20e-02	7.5	7.5	5.2	5.2	-32.2	2.2	-12.7	2.18e-05	4.71e-05	2.46e-02
8	ok 1400	0.18	1.92e-02	1.11e-02	7.5	7.5	5.2	5.2	-28.5	-0.2	-13.1	1.36e-04	4.42e-05	2.69e-02
8	ok 1401	0.18	1.85e-02	1.28e-02	7.5	7.5	5.2	5.2	-35.9	1.9	-11.3	-2.01e-05	7.48e-05	2.74e-02
8	ok 1402	0.18	2.41e-02	1.17e-02	7.5	7.5	5.2	5.2	-31.9	-5.32e-02	-11.6	1.29e-04	7.14e-05	2.95e-02
8	ok 1403	0.18	2.25e-02	1.33e-02	7.5	7.5	5.2	5.2	-38.4	1.5	-9.7	-6.06e-05	8.94e-05	3.09e-02
8	ok 1404	0.18	2.94e-02	1.21e-02	7.5	7.5	5.2	5.2	-34.3	0.2	-10.0	1.27e-04	8.90e-05	3.25e-02
8	ok 1405	0.18	2.64e-02	1.36e-02	7.5	7.5	5.2	5.2	-39.8	1.2	-8.2	-1.01e-04	8.10e-05	3.45e-02
8	ok 1406	0.18	3.45e-02	1.23e-02	7.5	7.5	5.2	5.2	-35.8	0.4	-8.4	1.27e-04	9.11e-05	3.59e-02
8	ok 1407	0.18	2.99e-02	1.36e-02	7.5	7.5	5.2	5.2	-40.5	0.9	-6.8	-1.47e-04	5.31e-05	3.73e-02
8	ok 1408	0.18	3.91e-02	1.24e-02	7.5	7.5	5.2	5.2	-36.7	0.8	-6.9	1.24e-04	7.97e-05	3.89e-02
8	ok 1409	0.18	3.31e-02	1.36e-02	7.5	7.5	5.2	5.2	-40.7	0.9	-5.7	-2.00e-04	1.45e-05	3.92e-02
8	ok 1410	0.18	4.31e-02	1.24e-02	7.5	7.5	5.2	5.2	-37.1	1.2	-5.6	1.17e-04	5.94e-05	4.11e-02
8	ok 1411	0.18	3.57e-02	1.35e-02	7.5	7.5	5.2	5.2	-40.6	0.9	-4.8	-2.62e-04	-2.72e-05	4.03e-02
8	ok 1412	0.18	4.64e-02	1.24e-02	7.5	7.5	5.2	5.2	-37.3	1.8	-4.7	1.05e-04	3.47e-05	4.27e-02
8	ok 1413	0.18	3.77e-02	1.34e-02	7.5	7.5	5.2	5.2	-40.5	1.2	-4.2	-3.30e-04	-6.93e-05	4.12e-02
8	ok 1414	0.18	4.89e-02	1.24e-02	7.5	7.5	5.2	5.2	-37.4	2.5	-3.9	9.22e-05	7.41e-06	4.35e-02
8	ok 1415	0.18	3.89e-02	1.33e-02	7.5	7.5	5.2	5.2	-40.4	1.7	-3.8	-3.96e-04	-1.14e-04	4.20e-02
8	ok 1416	0.18	5.05e-02	1.23e-02	7.5	7.5	5.2	5.2	-37.4	3.3	-3.3	8.30e-05	-2.33e-05	4.38e-02
8	ok 1417	0.18	3.93e-02	1.33e-02	7.5	7.5	5.2	5.2	-40.3	2.4	-3.4	-4.53e-04	-1.67e-04	4.28e-02
8	ok 1418	0.18	5.11e-02	1.23e-02	7.5	7.5	5.2	5.2	-37.4	4.1	-2.9	8.52e-05	-5.90e-05	4.34e-02
8	ok 1419	0.18	3.90e-02	1.33e-02	7.5	7.5	5.2	5.2	-40.3	3.2	-3.1	-4.93e-04	-2.30e-04	4.33e-02
8	ok 1420	0.18	5.08e-02	1.23e-02	7.5	7.5	5.2	5.2	-37.4	5.1	-2.4	1.07e-04	-9.94e-05	4.20e-02
8	ok 1421	0.18	3.79e-02	1.32e-02	7.5	7.5	5.2	5.2	-40.4	4.1	-2.7	-5.06e-04	-2.99e-04	4.27e-02
8	ok 1422	0.18	4.95e-02	1.23e-02	7.5	7.5	5.2	5.2	-37.3	6.1	-2.0	1.57e-04	-1.41e-04	3.93e-02
8	ok 1423	0.18	3.61e-02	1.32e-02	7.5	7.5	5.2	5.2	-40.2	4.8	-2.7	-5.19e-04	-3.86e-04	4.18e-02
8	ok 1424	0.18	4.73e-02	1.22e-02	7.5	7.5	5.2	5.2	-37.1	7.1	1.8	2.39e-04	-1.72e-04	3.48e-02
8	ok 1425	0.18	3.35e-02	1.30e-02	7.5	7.5	5.2	5.2	-39.8	6.2	-1.5	-4.35e-04	-4.19e-04	3.60e-02
8	ok 1426	0.18	4.42e-02	1.20e-02	7.5	7.5	5.2	5.2	-36.5	8.0	2.4	3.54e-04	-1.83e-04	2.81e-02
8	ok 1427	0.18	3.03e-02	1.27e-02	7.5	7.5	5.2	5.2	-38.7	7.1	2.1	-3.47e-04	-4.41e-04	2.76e-02
8	ok 1428	0.18	4.03e-02	1.17e-02	7.5	7.5	5.2	5.2	-35.5	8.8	3.0	4.90e-04	-1.57e-04	1.90e-02
8	ok 1429	0.18	2.65e-02	1.21e-02	7.5	7.5	5.2	5.2	-36.9	7.8	3.0	-2.31e-04	-4.21e-04	1.43e-02
8	ok 1430	0.18	3.56e-02	1.11e-02	7.5	7.5	5.2	5.2	-33.7	9.4	3.6	6.23e-04	-8.19e-05	6.68e-03
8	ok 1431	0.18	2.22e-02	1.12e-02	7.5	7.5	5.2	5.2	-33.9	8.2	3.7	-1.01e-04	-3.43e-04	-5.09e-03
8	ok 1432	0.18	3.03e-02	1.02e-02	7.5	7.5	5.2	5.2	-30.9	9.8	4.0	7.08e-04	4.04e-05	-9.15e-03

8	ok 1433	0.18	1.76e-02	9.83e-03	7.5	7.5	5.2	5.2	-29.6	8.3	4.1	1.60e-05	-1.88e-04	-2.92e-02
8	ok 1434	0.18	2.51e-02	8.97e-03	7.5	7.5	5.2	5.2	-27.0	9.8	4.1	6.93e-04	1.81e-04	-2.73e-02
8	ok 1435	0.18	1.27e-02	8.09e-03	7.5	7.5	5.2	5.2	-20.5	7.4	9.6	-3.25e-05	6.20e-05	-2.66e-02
8	ok 1436	0.18	1.93e-02	7.36e-03	7.5	7.5	5.2	5.2	-18.1	8.7	9.3	3.81e-04	2.24e-04	-1.64e-02
8	ok 1437	0.18	1.89e-02	6.27e-03	7.5	7.5	5.2	5.2	-15.4	7.0	9.8	-1.41e-04	1.21e-04	-2.87e-02
8	ok 1438	0.18	2.59e-02	5.65e-03	7.5	7.5	5.2	5.2	-13.6	8.2	9.5	1.46e-04	7.94e-05	-1.47e-02
8	ok 1439	0.18	3.47e-02	4.54e-03	7.5	7.5	5.2	5.2	-9.6	6.5	9.2	-3.40e-04	2.28e-05	-1.14e-02
8	ok 1440	0.18	3.05e-02	4.07e-03	7.5	7.5	5.2	5.2	-8.4	7.9	8.9	-1.17e-04	-1.69e-04	3.63e-03
8	ok 1441	0.18	1.26e-02	8.98e-03	7.5	7.5	5.2	5.2	-6.6	-6.5	-20.2	3.48e-02	5.90e-02	-6.1
8	ok 1442	0.18	1.52e-02	1.05e-02	7.5	7.5	5.2	5.2	-4.2	-19.0	-17.6	-2.12e-04	2.23e-04	1.56e-03
8	ok 1443	0.18	1.32e-02	9.05e-03	7.5	7.5	5.2	5.2	-10.6	-7.9	-16.9	0.1	5.10e-02	-7.0
8	ok 1444	0.18	1.47e-02	9.43e-03	7.5	7.5	5.2	5.2	-10.3	-14.6	-15.2	-1.45e-04	-7.17e-05	1.51e-02
8	ok 1445	0.18	1.75e-02	9.47e-03	7.5	7.5	5.2	5.2	-20.0	-5.2	-14.1	2.07e-04	4.42e-06	2.49e-02
8	ok 1446	0.18	2.15e-02	9.27e-03	7.5	7.5	5.2	5.2	-15.6	-11.9	-13.7	1.62e-04	9.89e-06	1.23e-02
8	ok 1447	0.18	2.37e-02	1.00e-02	7.5	7.5	5.2	5.2	-24.3	-4.3	-12.6	2.43e-04	4.49e-05	2.59e-02
8	ok 1448	0.18	2.73e-02	9.35e-03	7.5	7.5	5.2	5.2	-19.8	-9.8	-12.3	3.41e-04	5.50e-05	1.23e-02
8	ok 1449	0.18	3.04e-02	1.05e-02	7.5	7.5	5.2	5.2	-27.5	-3.4	-11.0	2.95e-04	7.46e-05	2.74e-02
8	ok 1450	0.18	3.32e-02	9.42e-03	7.5	7.5	5.2	5.2	-23.1	-8.4	-10.0	4.64e-04	8.28e-05	1.40e-02
8	ok 1451	0.18	3.73e-02	1.07e-02	7.5	7.5	5.2	5.2	-29.8	-2.3	-9.3	3.47e-04	9.44e-05	3.01e-02
8	ok 1452	0.18	3.99e-02	9.45e-03	7.5	7.5	5.2	5.2	-25.4	-6.5	-8.3	5.72e-04	1.05e-04	1.64e-02
8	ok 1453	0.18	4.39e-02	1.09e-02	7.5	7.5	5.2	5.2	-31.4	-1.2	-7.7	3.96e-04	1.06e-04	3.33e-02
8	ok 1454	0.18	4.54e-02	9.50e-03	7.5	7.5	5.2	5.2	-27.1	-4.5	-6.7	6.71e-04	1.25e-04	1.89e-02
8	ok 1455	0.18	4.98e-02	1.10e-02	7.5	7.5	5.2	5.2	-32.5	-7.92e-02	-6.1	4.41e-04	1.09e-04	3.64e-02
8	ok 1456	0.18	5.09e-02	9.63e-03	7.5	7.5	5.2	5.2	-28.4	-2.5	-5.2	7.67e-04	1.43e-04	2.12e-02
8	ok 1457	0.18	5.47e-02	1.11e-02	7.5	7.5	5.2	5.2	-33.2	1.1	-4.8	4.84e-04	1.08e-04	3.88e-02
8	ok 1458	0.18	5.53e-02	9.78e-03	7.5	7.5	5.2	5.2	-29.0	0.7	-4.4	8.55e-04	1.59e-04	2.23e-02
8	ok 1459	0.18	5.86e-02	1.12e-02	7.5	7.5	5.2	5.2	-33.6	2.3	-3.7	5.23e-04	1.04e-04	4.04e-02
8	ok 1460	0.18	5.88e-02	9.93e-03	7.5	7.5	5.2	5.2	-29.8	2.8	-3.4	9.42e-04	1.75e-04	2.35e-02
8	ok 1461	0.18	6.17e-02	1.12e-02	7.5	7.5	5.2	5.2	-33.9	3.6	-2.9	5.63e-04	9.70e-05	4.11e-02
8	ok 1462	0.18	6.16e-02	1.01e-02	7.5	7.5	5.2	5.2	-30.3	4.7	3.2	1.03e-03	1.90e-04	2.39e-02
8	ok 1463	0.18	6.37e-02	1.13e-02	7.5	7.5	5.2	5.2	-34.1	4.8	-2.3	6.07e-04	8.79e-05	4.07e-02
8	ok 1464	0.18	6.34e-02	1.03e-02	7.5	7.5	5.2	5.2	-30.7	6.4	3.7	1.12e-03	2.05e-04	2.32e-02
8	ok 1465	0.18	6.45e-02	1.13e-02	7.5	7.5	5.2	5.2	-34.2	6.0	-1.8	6.63e-04	7.66e-05	3.90e-02
8	ok 1466	0.18	6.42e-02	1.03e-02	7.5	7.5	5.2	5.2	-30.9	7.9	4.0	1.21e-03	2.21e-04	2.13e-02
8	ok 1467	0.18	6.42e-02	1.13e-02	7.5	7.5	5.2	5.2	-34.2	7.1	1.8	7.40e-04	6.54e-05	3.56e-02
8	ok 1468	0.18	6.39e-02	1.04e-02	7.5	7.5	5.2	5.2	-30.9	9.2	4.2	1.33e-03	2.41e-04	1.78e-02
8	ok 1469	0.18	6.27e-02	1.12e-02	7.5	7.5	5.2	5.2	-34.1	8.1	2.3	8.46e-04	5.73e-05	3.04e-02
8	ok 1470	0.18	6.25e-02	1.03e-02	7.5	7.5	5.2	5.2	-30.8	10.2	4.5	1.47e-03	2.66e-04	1.23e-02
8	ok 1471	0.18	6.00e-02	1.12e-02	7.5	7.5	5.2	5.2	-33.8	9.0	2.7	9.90e-04	6.01e-05	2.33e-02
8	ok 1472	0.18	6.03e-02	1.02e-02	7.5	7.5	5.2	5.2	-30.5	10.9	4.7	1.66e-03	3.01e-04	4.97e-03
8	ok 1473	0.18	5.64e-02	1.10e-02	7.5	7.5	5.2	5.2	-33.2	9.7	3.2	1.18e-03	8.52e-05	1.46e-02
8	ok 1474	0.18	5.71e-02	1.01e-02	7.5	7.5	5.2	5.2	-29.9	11.4	5.0	1.92e-03	3.53e-04	-3.92e-03
8	ok 1475	0.18	5.17e-02	1.07e-02	7.5	7.5	5.2	5.2	-32.2	10.4	3.7	1.40e-03	1.47e-04	5.36e-03
8	ok 1476	0.18	5.26e-02	9.76e-03	7.5	7.5	5.2	5.2	-28.9	11.7	5.3	2.27e-03	4.28e-04	-1.28e-02
8	ok 1477	0.18	4.59e-02	1.01e-02	7.5	7.5	5.2	5.2	-30.5	10.8	4.0	1.63e-03	2.54e-04	-3.12e-03
8	ok 1478	0.18	4.77e-02	9.28e-03	7.5	7.5	5.2	5.2	-27.4	11.7	5.5	2.72e-03	5.30e-04	-1.85e-02
8	ok 1479	0.18	3.97e-02	9.30e-03	7.5	7.5	5.2	5.2	-28.0	11.0	4.2	1.77e-03	3.98e-04	-9.32e-03
8	ok 1480	0.18	4.23e-02	8.54e-03	7.5	7.5	5.2	5.2	-25.2	11.6	5.4	3.18e-03	6.44e-04	-1.58e-02
8	ok 1481	0.18	3.39e-02	8.11e-03	7.5	7.5	5.2	5.2	-24.4	10.9	4.0	1.71e-03	5.18e-04	-1.26e-02
8	ok 1482	0.18	3.62e-02	7.41e-03	7.5	7.5	5.2	5.2	-21.9	11.3	5.0	3.41e-03	7.09e-04	1.64e-03
8	ok 1483	0.18	2.65e-02	6.55e-03	7.5	7.5	5.2	5.2	-15.5	9.5	8.5	1.10e-03	3.98e-04	6.18e-03
8	ok 1484	0.18	2.92e-02	5.83e-03	7.5	7.5	5.2	5.2	-17.2	10.9	4.3	2.91e-03	5.86e-04	3.55e-02
8	ok 1485	0.18	1.98e-02	4.85e-03	7.5	7.5	5.2	5.2	-11.3	8.4	8.9	5.63e-04	7.46e-05	7.18e-03
8	ok 1486	0.18	2.20e-02	3.97e-03	7.5	7.5	5.2	5.2	-9.7	10.3	-5.8	0.1	-2.75e-02	-17.7
8	ok 1487	0.18	2.37e-02	3.80e-03	7.5	7.5	5.2	5.2	-7.4	8.2	9.0	1.42e-04	-3.11e-04	1.37e-02
8	ok 1488	0.18	1.72e-02	4.09e-03	7.5	7.5	5.2	5.2	-9.3	3.8	7.1	-2.44e-03	-1.23e-03	9.02e-02

M_S	x/d	verif.	ver. rid	Af pr-	Af pr+	Af sec-	Af sec+	N z	N o	N zo	M z	M o	M zo

									-56.52	-26.24	-20.16	-0.25	-0.45	-17.66
		0.18	0.06	0.02	7.54	7.54	5.24	5.24	17.91	14.57	16.14	0.30	0.30	13.79
							-OMISSIS-							
9	ok 1876	0.16	6.20e-02	1.61e-03	10.3	10.3	10.3	10.3	-1.1	-3.6	-2.4	-1.2	5.7	-175.8
9	ok 1877	0.16	8.39e-02	1.47e-03	10.3	10.3	10.3	10.3	-0.9	-2.3	-2.8	-1.4	7.6	-257.5
9	ok 1878	0.16	0.1	1.35e-03	10.3	10.3	10.3	10.3	-0.7	-1.8	-4.2	-1.8	8.5	-428.8
9	ok 1879	0.16	0.1	1.25e-03	10.3	10.3	10.3	10.3	-0.4	-0.4	-4.8	-1.9	9.1	-594.2
9	ok 1880	0.16	0.1	1.18e-03	10.3	10.3	10.3	10.3	-0.4	-0.2	-5.0	-1.6	8.0	-771.3
9	ok 1881	0.16	0.1	1.18e-03	10.3	10.3	10.3	10.3	-0.3	1.4	-5.8	-0.8	3.0	-941.6
9	ok 1882	0.16	0.2	2.22e-03	10.3	10.3	10.3	10.3	-0.6	9.5	-8.0	4.7	-13.9	-828.9
9	ok 1883	0.16	2.81e-02	2.44e-04	10.3	10.3	10.3	10.3	5.8	13.5	-2.0	1.5	2.5	27.5
9	ok 1884	0.16	2.92e-02	3.17e-04	10.3	10.3	10.3	10.3	5.2	11.3	3.9	1.4	2.4	-43.8
9	ok 1885	0.16	3.15e-02	1.45e-04	10.3	10.3	10.3	10.3	5.1	9.1	4.1	1.1	1.9	-53.2
9	ok 1886	0.16	3.56e-02	4.00e-05	10.3	10.3	10.3	10.3	4.5	5.9	-3.4	-0.1	-3.5	7.8
9	ok 1887	0.16	4.75e-02	0.0	10.3	10.3	10.3	10.3	5.3	6.8	-1.0	-0.5	-4.7	21.4
9	ok 1888	0.16	5.98e-02	1.05e-04	10.3	10.3	10.3	10.3	4.5	6.7	1.3	-1.0	-5.6	-47.6
9	ok 1889	0.16	7.63e-02	2.16e-04	10.3	10.3	10.3	10.3	3.5	7.2	-1.6	-1.6	-7.5	11.8
9	ok 1890	0.16	9.26e-02	3.21e-04	10.3	10.3	10.3	10.3	1.7	7.4	-1.9	-1.7	-9.1	14.9
9	ok 1891	0.16	0.1	4.85e-04	10.3	10.3	10.3	10.3	1.8	7.5	-2.0	-0.5	-10.9	21.8
9	ok 1892	0.16	0.1	6.49e-04	10.3	10.3	10.3	10.3	-9.59e-02	7.2	-2.0	2.3	-13.0	65.6
9	ok 1893	0.16	0.1	6.85e-04	10.3	10.3	10.3	10.3	0.5	4.2	0.4	9.3	-8.6	343.1
9	ok 1894	0.16	0.1	6.77e-04	10.3	10.3	10.3	10.3	0.5	4.2	-0.4	9.3	-8.6	-343.1
9	ok 1895	0.16	0.1	6.46e-04	10.3	10.3	10.3	10.3	-9.45e-02	7.2	2.0	2.2	-12.9	-65.1
9	ok 1896	0.16	0.1	4.81e-04	10.3	10.3	10.3	10.3	0.9	7.5	2.0	-0.5	-10.9	-21.0
9	ok 1897	0.16	9.25e-02	3.25e-04	10.3	10.3	10.3	10.3	1.7	7.3	2.0	-1.7	-9.1	-14.6
9	ok 1898	0.16	7.68e-02	2.01e-04	10.3	10.3	10.3	10.3	3.6	7.1	1.6	-1.6	-7.5	-12.7
9	ok 1899	0.16	6.25e-02	1.27e-04	10.3	10.3	10.3	10.3	4.5	6.6	1.4	-1.1	-6.1	-17.7
9	ok 1900	0.16	4.58e-02	0.0	10.3	10.3	10.3	10.3	5.2	6.8	-1.3	-0.5	-4.3	52.9
9	ok 1901	0.16	3.53e-02	3.85e-05	10.3	10.3	10.3	10.3	4.5	5.9	3.4	-0.1	-3.5	-8.2
9	ok 1902	0.16	3.15e-02	1.46e-04	10.3	10.3	10.3	10.3	4.9	9.1	-4.4	1.2	1.9	56.2
9	ok 1903	0.16	2.92e-02	3.16e-04	10.3	10.3	10.3	10.3	5.2	11.3	-3.9	1.4	2.4	44.4
9	ok 1910	0.16	0.2	1.25e-03	10.3	10.3	10.3	10.3	1.9	6.0	7.3	-4.1	-9.2	873.6
9	ok 1911	0.16	0.1	1.33e-03	10.3	10.3	10.3	10.3	4.3	6.0	7.0	-2.5	-4.3	667.1
9	ok 1912	0.16	0.1	1.31e-03	10.3	10.3	10.3	10.3	0.8	4.3	5.3	-2.0	1.5	905.7
9	ok 1913	0.16	9.91e-02	1.35e-03	10.3	10.3	10.3	10.3	1.8	4.8	6.3	-4.1	-1.0	708.1
9	ok 1914	0.16	9.95e-02	1.28e-03	10.3	10.3	10.3	10.3	0.2	2.8	4.5	-2.2	4.4	801.8
9	ok 1915	0.16	9.56e-02	1.46e-03	10.3	10.3	10.3	10.3	0.5	3.6	6.7	-5.1	1.0	627.6
9	ok 1916	0.16	8.98e-02	1.31e-03	10.3	10.3	10.3	10.3	-9.11e-02	2.6	4.3	-2.4	5.1	648.0
9	ok 1917	0.16	9.22e-02	1.52e-03	10.3	10.3	10.3	10.3	1.76e-02	4.0	5.0	-6.5	1.0	520.0
9	ok 1918	0.16	7.22e-02	1.34e-03	10.3	10.3	10.3	10.3	-0.4	2.6	2.8	-2.6	4.9	459.3
9	ok 1919	0.16	9.14e-02	1.53e-03	10.3	10.3	10.3	10.3	-0.4	3.4	4.3	-7.6	0.7	381.7
9	ok 1920	0.16	5.26e-02	1.37e-03	10.3	10.3	10.3	10.3	-0.5	1.8	2.4	-2.7	4.0	304.3
9	ok 1921	0.16	9.73e-02	1.49e-03	10.3	10.3	10.3	10.3	0.1	4.1	1.0	-9.3	-0.6	177.5
9	ok 1922	0.16	3.53e-02	1.39e-03	10.3	10.3	10.3	10.3	-0.6	4.64e-02	3.1	-2.7	2.8	196.9
9	ok 1923	0.16	0.1	1.42e-03	10.3	10.3	10.3	10.3	-6.84e-03	3.9	0.9	-10.1	-1.2	104.0
9	ok 1924	0.16	0.1	1.34e-03	10.3	10.3	10.3	10.3	-7.44e-02	3.7	0.8	-10.6	-1.6	53.9
9	ok 1925	0.16	3.40e-02	1.40e-03	10.3	10.3	10.3	10.3	-0.6	-0.7	2.8	-2.9	1.7	114.5
9	ok 1926	0.16	3.43e-02	1.40e-03	10.3	10.3	10.3	10.3	-0.6	-1.3	2.5	-3.0	0.9	64.1
9	ok 1927	0.16	0.1	1.27e-03	10.3	10.3	10.3	10.3	-0.1	3.7	0.8	-11.0	-1.9	22.3
9	ok 1928	0.16	0.1	1.25e-03	10.3	10.3	10.3	10.3	-0.2	3.6	0.8	-11.2	-2.1	5.1
9	ok 1929	0.16	3.50e-02	1.39e-03	10.3	10.3	10.3	10.3	-7.99e-02	3.3	0.6	-3.5	-0.2	18.1
9	ok 1930	0.16	3.57e-02	1.38e-03	10.3	10.3	10.3	10.3	-7.56e-02	3.1	0.6	-3.5	-0.5	0.9
9	ok 1931	0.16	0.1	1.18e-03	10.3	10.3	10.3	10.3	-0.2	3.5	1.0	-11.3	-2.2	-8.1
9	ok 1932	0.16	0.1	1.16e-03	10.3	10.3	10.3	10.3	-0.2	3.3	1.0	-11.3	-2.3	-9.2
9	ok 1933	0.16	3.61e-02	1.36e-03	10.3	10.3	10.3	10.3	-6.82e-02	2.9	0.7	-3.6	-0.7	-6.7
9	ok 1934	0.16	3.62e-02	1.36e-03	10.3	10.3	10.3	10.3	-7.70e-02	2.7	0.7	-3.6	-0.7	-13.8
9	ok 1935	0.16	0.1	1.15e-03	10.3	10.3	10.3	10.3	-0.2	3.1	1.1	-11.3	-2.3	-8.8

9	ok 1936	0.16	0.1	1.11e-03	10.3	10.3	10.3	10.3	-0.1	2.9	1.2	-11.2	-2.2	-9.8
9	ok 1937	0.16	3.60e-02	1.31e-03	10.3	10.3	10.3	10.3	-7.11e-02	2.5	0.7	-3.5	-0.5	-21.3
9	ok 1938	0.16	3.55e-02	1.27e-03	10.3	10.3	10.3	10.3	-6.21e-02	2.3	0.7	-3.4	-0.2	-35.9
9	ok 1939	0.16	0.1	1.06e-03	10.3	10.3	10.3	10.3	-0.1	2.6	1.2	-11.1	-2.1	-19.2
9	ok 1940	0.16	3.51e-02	1.27e-03	10.3	10.3	10.3	10.3	-0.6	-5.2	-0.3	-3.0	1.0	-67.0
9	ok 1941	0.16	0.1	1.03e-03	10.3	10.3	10.3	10.3	-3.06e-02	2.3	1.2	-10.8	-1.9	-35.2
9	ok 1942	0.16	0.1	9.67e-04	10.3	10.3	10.3	10.3	8.08e-02	2.0	1.2	-10.4	-1.6	-64.6
9	ok 1943	0.16	3.50e-02	1.28e-03	10.3	10.3	10.3	10.3	-0.6	-5.0	-0.7	-2.9	2.0	-119.9
9	ok 1944	0.16	3.76e-02	1.35e-03	10.3	10.3	10.3	10.3	-0.5	-4.6	-1.3	-2.9	3.1	-203.8
9	ok 1945	0.16	0.1	1.06e-03	10.3	10.3	10.3	10.3	0.2	1.8	1.1	-9.9	-1.2	-111.3
9	ok 1946	0.16	0.1	1.22e-03	10.3	10.3	10.3	10.3	-0.3	-1.5	-2.8	-8.4	0.4	-280.3
9	ok 1947	0.16	5.59e-02	1.42e-03	10.3	10.3	10.3	10.3	-0.3	-4.0	-1.8	-2.8	4.3	-322.7
9	ok 1948	0.16	7.61e-02	1.49e-03	10.3	10.3	10.3	10.3	-2.86e-02	-3.3	-2.5	-2.7	5.3	-466.5
9	ok 1949	0.16	9.70e-02	1.35e-03	10.3	10.3	10.3	10.3	-0.1	-1.1	-4.2	-8.0	0.8	-413.3
9	ok 1950	0.16	9.79e-02	1.42e-03	10.3	10.3	10.3	10.3	0.6	-0.5	-5.2	-6.8	1.1	-562.0
9	ok 1951	0.16	9.35e-02	1.52e-03	10.3	10.3	10.3	10.3	0.6	-2.5	-3.2	-2.7	5.5	-666.4
9	ok 1952	0.16	0.1	1.58e-03	10.3	10.3	10.3	10.3	1.3	-2.8	-3.6	-2.5	4.8	-817.4
9	ok 1953	0.16	0.1	1.42e-03	10.3	10.3	10.3	10.3	1.9	-0.6	-4.9	-5.4	1.3	-671.6
9	ok 1954	0.16	0.1	1.33e-03	10.3	10.3	10.3	10.3	4.0	-0.1	-6.6	-4.6	-0.9	-769.7
9	ok 1955	0.16	0.1	1.71e-03	10.3	10.3	10.3	10.3	2.4	-1.9	-5.0	-2.2	2.0	-943.4
9	ok 1956	0.16	0.2	2.10e-03	10.3	10.3	10.3	10.3	4.0	-2.4	-9.4	-3.9	-8.0	-1025.7
9	ok 1957	0.16	0.1	1.59e-03	10.3	10.3	10.3	10.3	6.7	-0.7	-7.6	-2.8	-4.8	-772.2
9	ok 1958	0.16	0.1	1.54e-03	10.3	10.3	10.3	10.3	4.9	5.4	8.3	-2.4	-4.4	654.3
9	ok 1959	0.16	0.2	1.40e-03	10.3	10.3	10.3	10.3	2.3	5.6	8.4	-4.5	-10.1	873.6
9	ok 1960	0.16	9.97e-02	1.53e-03	10.3	10.3	10.3	10.3	2.3	4.4	7.5	-4.0	-1.4	710.7
9	ok 1961	0.16	0.1	1.34e-03	10.3	10.3	10.3	10.3	1.1	5.4	6.1	-2.8	-1.5	927.4
9	ok 1962	0.16	9.66e-02	1.60e-03	10.3	10.3	10.3	10.3	1.0	2.7	7.8	-4.9	0.9	662.4
9	ok 1963	0.16	9.91e-02	1.43e-03	10.3	10.3	10.3	10.3	0.5	1.6	5.4	-2.4	4.0	834.5
9	ok 1964	0.16	9.39e-02	1.64e-03	10.3	10.3	10.3	10.3	0.3	3.2	5.6	-6.2	1.1	544.5
9	ok 1965	0.16	9.21e-02	1.44e-03	10.3	10.3	10.3	10.3	-1.11e-02	1.7	3.7	-2.5	5.2	664.7
9	ok 1966	0.16	9.22e-02	1.64e-03	10.3	10.3	10.3	10.3	-0.2	2.8	5.4	-7.3	0.8	433.2
9	ok 1967	0.16	7.77e-02	1.46e-03	10.3	10.3	10.3	10.3	-0.2	1.5	3.6	-2.8	5.0	520.2
9	ok 1968	0.16	9.46e-02	1.61e-03	10.3	10.3	10.3	10.3	-0.5	2.2	4.8	-8.1	0.4	307.5
9	ok 1969	0.16	6.02e-02	1.48e-03	10.3	10.3	10.3	10.3	-0.5	0.5	3.1	-2.7	4.3	369.1
9	ok 1970	0.16	0.1	1.54e-03	10.3	10.3	10.3	10.3	0.1	3.6	1.1	-9.7	-1.0	138.1
9	ok 1971	0.16	4.28e-02	1.48e-03	10.3	10.3	10.3	10.3	-0.6	-0.4	2.7	-2.8	3.4	243.3
9	ok 1972	0.16	0.1	1.46e-03	10.3	10.3	10.3	10.3	-1.32e-02	3.4	1.0	-10.3	-1.4	82.3
9	ok 1973	0.16	3.53e-02	1.49e-03	10.3	10.3	10.3	10.3	-0.7	-2.3	3.3	-2.9	2.3	161.8
9	ok 1974	0.16	0.1	1.37e-03	10.3	10.3	10.3	10.3	-8.80e-02	3.3	1.0	-10.8	-1.8	43.9
9	ok 1975	0.16	3.46e-02	1.48e-03	10.3	10.3	10.3	10.3	-0.7	-3.1	2.9	-2.9	1.4	99.4
9	ok 1976	0.16	0.1	1.31e-03	10.3	10.3	10.3	10.3	-0.1	3.2	1.0	-11.0	-2.0	20.2
9	ok 1977	0.16	3.46e-02	1.46e-03	10.3	10.3	10.3	10.3	-1.5	-4.3	3.1	-3.4	0.4	53.4
9	ok 1978	0.16	0.1	1.24e-03	10.3	10.3	10.3	10.3	-0.2	3.0	1.1	-11.2	-2.1	6.6
9	ok 1979	0.16	3.50e-02	1.43e-03	10.3	10.3	10.3	10.3	-0.4	-1.1	3.4	-3.3	-0.2	35.8
9	ok 1980	0.16	0.1	1.21e-03	10.3	10.3	10.3	10.3	-0.2	2.8	1.2	-11.3	-2.2	-4.9
9	ok 1981	0.16	3.53e-02	1.41e-03	10.3	10.3	10.3	10.3	-0.4	-1.3	3.2	-3.4	-0.4	23.3
9	ok 1982	0.16	0.1	1.19e-03	10.3	10.3	10.3	10.3	-0.2	2.6	1.2	-11.2	-2.2	-9.0
9	ok 1983	0.16	3.54e-02	1.39e-03	10.3	10.3	10.3	10.3	-9.02e-02	2.3	0.8	-3.4	-0.5	-12.7
9	ok 1984	0.16	0.1	1.14e-03	10.3	10.3	10.3	10.3	-0.2	2.4	1.2	-11.1	-2.1	-17.7
9	ok 1985	0.16	3.52e-02	1.33e-03	10.3	10.3	10.3	10.3	-1.6	-5.5	0.5	-3.4	0.3	-30.1
9	ok 1986	0.16	0.1	1.08e-03	10.3	10.3	10.3	10.3	-0.1	2.2	1.2	-10.9	-2.0	-30.9
9	ok 1987	0.16	3.50e-02	1.28e-03	10.3	10.3	10.3	10.3	-1.5	-5.4	-0.2	-3.4	0.8	-60.3
9	ok 1988	0.16	0.1	1.01e-03	10.3	10.3	10.3	10.3	-1.68e-02	1.9	1.2	-10.7	-1.7	-54.0
9	ok 1989	0.16	3.51e-02	1.26e-03	10.3	10.3	10.3	10.3	-1.5	-5.3	-0.8	-3.2	1.5	-106.4
9	ok 1990	0.16	0.1	9.58e-04	10.3	10.3	10.3	10.3	8.87e-02	-1.3	2.7	-10.5	-1.2	-87.7
9	ok 1991	0.16	3.59e-02	1.28e-03	10.3	10.3	10.3	10.3	-1.4	-5.0	-1.5	-3.1	2.5	-173.4
9	ok 1992	0.16	0.1	1.09e-03	10.3	10.3	10.3	10.3	0.4	-1.3	2.3	-9.9	-0.8	-158.5
9	ok 1993	0.16	4.70e-02	1.36e-03	10.3	10.3	10.3	10.3	-0.6	-4.4	-1.4	-2.9	3.7	-263.2

9	ok 1994	0.16	9.83e-02	1.24e-03	10.3	10.3	10.3	10.3	-0.4	-1.4	-3.5	-8.6	0.5	-341.4
9	ok 1995	0.16	6.53e-02	1.43e-03	10.3	10.3	10.3	10.3	-0.3	-4.0	-1.9	-2.7	4.8	-396.1
9	ok 1996	0.16	9.75e-02	1.35e-03	10.3	10.3	10.3	10.3	7.46e-02	-1.0	-4.5	-7.6	1.0	-471.9
9	ok 1997	0.16	8.36e-02	1.49e-03	10.3	10.3	10.3	10.3	0.1	-3.2	-2.6	-2.8	5.5	-554.3
9	ok 1998	0.16	9.88e-02	1.41e-03	10.3	10.3	10.3	10.3	0.9	-0.3	-5.4	-6.4	1.1	-610.5
9	ok 1999	0.16	9.73e-02	1.53e-03	10.3	10.3	10.3	10.3	0.7	-2.5	-3.5	-2.6	5.2	-729.0
9	ok 2000	0.16	0.1	1.38e-03	10.3	10.3	10.3	10.3	2.5	-0.4	-5.2	-5.2	1.1	-705.4
9	ok 2001	0.16	0.1	1.61e-03	10.3	10.3	10.3	10.3	1.6	-2.6	-3.9	-2.4	4.4	-863.8
9	ok 2002	0.16	0.1	1.30e-03	10.3	10.3	10.3	10.3	4.9	-0.2	-6.9	-4.3	-1.2	-780.9
9	ok 2003	0.16	0.1	1.80e-03	10.3	10.3	10.3	10.3	2.7	-1.2	-6.5	-2.8	-0.9	-987.0
9	ok 2004	0.16	0.1	1.60e-03	10.3	10.3	10.3	10.3	7.3	-1.2	-7.9	-2.7	-5.6	-776.4
9	ok 2005	0.16	0.2	2.27e-03	10.3	10.3	10.3	10.3	5.1	-2.7	-10.4	-4.4	-8.4	-1036.0
9	ok 2068	0.16	0.2	1.40e-03	10.3	10.3	10.3	10.3	2.2	5.6	-8.4	-4.4	-10.1	-885.9
9	ok 2069	0.16	0.1	1.55e-03	10.3	10.3	10.3	10.3	4.8	5.5	-8.4	-2.5	-5.0	-652.4
9	ok 2070	0.16	0.1	1.34e-03	10.3	10.3	10.3	10.3	1.1	5.4	-6.2	-2.9	-1.6	-925.0
9	ok 2071	0.16	9.95e-02	1.54e-03	10.3	10.3	10.3	10.3	2.3	4.3	-7.5	-4.0	-1.3	-711.9
9	ok 2072	0.16	9.91e-02	1.46e-03	10.3	10.3	10.3	10.3	0.5	1.6	-5.4	-2.4	4.0	-834.4
9	ok 2073	0.16	9.67e-02	1.60e-03	10.3	10.3	10.3	10.3	1.0	2.7	-7.8	-4.9	0.9	-663.1
9	ok 2074	0.16	9.20e-02	1.44e-03	10.3	10.3	10.3	10.3	-1.38e-02	1.6	-3.7	-2.5	5.2	-664.5
9	ok 2075	0.16	9.39e-02	1.65e-03	10.3	10.3	10.3	10.3	0.3	3.1	-5.6	-6.2	1.1	-545.0
9	ok 2076	0.16	7.77e-02	1.47e-03	10.3	10.3	10.3	10.3	-0.2	0.4	-4.5	-2.7	5.0	-527.7
9	ok 2077	0.16	9.22e-02	1.65e-03	10.3	10.3	10.3	10.3	-0.2	2.8	-5.4	-7.3	0.8	-433.5
9	ok 2078	0.16	6.00e-02	1.48e-03	10.3	10.3	10.3	10.3	-0.5	0.5	-3.1	-2.7	4.3	-368.9
9	ok 2079	0.16	9.46e-02	1.61e-03	10.3	10.3	10.3	10.3	-0.5	2.2	-4.8	-8.1	0.4	-308.0
9	ok 2080	0.16	4.28e-02	1.49e-03	10.3	10.3	10.3	10.3	-0.6	-0.4	-2.7	-2.8	3.4	-243.7
9	ok 2081	0.16	0.1	1.55e-03	10.3	10.3	10.3	10.3	0.1	3.6	-1.1	-9.7	-1.0	-138.9
9	ok 2082	0.16	3.54e-02	1.49e-03	10.3	10.3	10.3	10.3	-0.7	-2.4	-3.3	-2.8	2.3	-164.8
9	ok 2083	0.16	0.1	1.47e-03	10.3	10.3	10.3	10.3	-1.32e-02	3.4	-1.0	-10.3	-1.4	-82.6
9	ok 2084	0.16	3.46e-02	1.48e-03	10.3	10.3	10.3	10.3	-0.7	-3.1	-2.9	-3.0	1.4	-99.2
9	ok 2085	0.16	0.1	1.38e-03	10.3	10.3	10.3	10.3	-8.83e-02	3.3	-1.0	-10.8	-1.8	-44.4
9	ok 2086	0.16	3.47e-02	1.47e-03	10.3	10.3	10.3	10.3	-0.7	-3.8	-2.6	-3.0	0.7	-57.2
9	ok 2087	0.16	0.1	1.31e-03	10.3	10.3	10.3	10.3	-0.1	3.2	-1.0	-11.0	-2.0	-20.6
9	ok 2088	0.16	3.51e-02	1.44e-03	10.3	10.3	10.3	10.3	-9.04e-02	2.6	-0.7	-3.4	-0.3	-16.0
9	ok 2089	0.16	0.1	1.24e-03	10.3	10.3	10.3	10.3	-0.2	3.0	-1.1	-11.2	-2.1	-6.9
9	ok 2090	0.16	3.54e-02	1.42e-03	10.3	10.3	10.3	10.3	-8.79e-02	2.4	-0.8	-3.4	-0.5	1.2
9	ok 2091	0.16	0.1	1.22e-03	10.3	10.3	10.3	10.3	-0.2	2.8	-1.2	-11.3	-2.2	4.5
9	ok 2092	0.16	3.55e-02	1.40e-03	10.3	10.3	10.3	10.3	-9.87e-02	2.2	-0.8	-3.5	-0.4	13.7
9	ok 2093	0.16	0.1	1.19e-03	10.3	10.3	10.3	10.3	-0.2	2.6	-1.2	-11.3	-2.2	8.5
9	ok 2094	0.16	3.54e-02	1.34e-03	10.3	10.3	10.3	10.3	-9.92e-02	2.0	-0.8	-3.4	-0.3	29.3
9	ok 2095	0.16	0.1	1.15e-03	10.3	10.3	10.3	10.3	-0.1	2.4	-1.3	-11.2	-2.1	14.5
9	ok 2096	0.16	3.51e-02	1.29e-03	10.3	10.3	10.3	10.3	-0.7	-4.2	0.8	-3.0	0.8	67.8
9	ok 2097	0.16	0.1	1.08e-03	10.3	10.3	10.3	10.3	-0.1	2.2	-1.2	-11.0	-2.0	30.5
9	ok 2098	0.16	3.51e-02	1.27e-03	10.3	10.3	10.3	10.3	-0.8	-5.3	0.3	-3.0	1.6	101.0
9	ok 2099	0.16	0.1	1.02e-03	10.3	10.3	10.3	10.3	-1.88e-02	1.9	-1.2	-10.7	-1.7	53.4
9	ok 2100	0.16	3.60e-02	1.29e-03	10.3	10.3	10.3	10.3	-0.7	-5.0	0.8	-2.9	2.6	169.1
9	ok 2101	0.16	0.1	9.63e-04	10.3	10.3	10.3	10.3	0.1	1.7	-1.1	-10.2	-1.4	90.6
9	ok 2102	0.16	4.70e-02	1.37e-03	10.3	10.3	10.3	10.3	-0.6	-4.6	1.3	-2.9	3.7	262.4
9	ok 2103	0.16	0.1	1.10e-03	10.3	10.3	10.3	10.3	0.3	1.5	-1.0	-9.6	-0.9	145.2
9	ok 2104	0.16	6.52e-02	1.44e-03	10.3	10.3	10.3	10.3	-0.3	-4.0	1.9	-2.7	4.8	394.8
9	ok 2105	0.16	9.85e-02	1.25e-03	10.3	10.3	10.3	10.3	-0.2	-1.5	3.0	-8.1	0.7	338.1
9	ok 2106	0.16	8.38e-02	1.50e-03	10.3	10.3	10.3	10.3	8.92e-02	-3.4	2.6	-2.8	5.5	553.0
9	ok 2107	0.16	9.78e-02	1.37e-03	10.3	10.3	10.3	10.3	0.3	-1.1	3.9	-7.2	1.1	467.8
9	ok 2108	0.16	9.75e-02	1.55e-03	10.3	10.3	10.3	10.3	0.7	-2.5	3.4	-2.6	5.3	726.9
9	ok 2109	0.16	9.92e-02	1.42e-03	10.3	10.3	10.3	10.3	0.9	-0.4	5.4	-6.4	1.1	609.7
9	ok 2110	0.16	0.1	1.62e-03	10.3	10.3	10.3	10.3	1.5	-2.6	3.9	-2.4	4.4	861.2
9	ok 2111	0.16	0.1	1.40e-03	10.3	10.3	10.3	10.3	2.4	-0.5	5.2	-5.2	1.1	706.0
9	ok 2112	0.16	0.1	1.81e-03	10.3	10.3	10.3	10.3	2.7	-1.2	6.5	-2.8	-0.7	985.9
9	ok 2113	0.16	0.1	1.31e-03	10.3	10.3	10.3	10.3	4.8	-0.3	6.9	-4.4	-1.2	784.3

9	ok 2114	0.16	0.1	1.60e-03	10.3	10.3	10.3	10.3	8.2	-0.9	7.8	-2.7	-5.1	775.5
9	ok 2115	0.16	0.2	2.23e-03	10.3	10.3	10.3	10.3	5.3	-2.8	10.2	-4.6	-8.2	1037.6

M_G	**x/d**	**verif.**	**ver. rid**	**Af pr-**	**Af pr+**	**Af sec-**	**Af sec+**	**N x**	**N y**	**N xy**	**M x**	**M y**	**M xy**
								-3.16	-10.02	-19.55	-27.82	-27.96	-1036.04
	0.16	0.29	3.39e-03	10.26	10.26	10.26	10.26	18.00	16.78	20.12	9.33	9.81	1037.62

17. VERIFICHE PER ELEMENTI IN ACCIAIO

Il programma consente la verifica dei seguenti tipi di elementi:
1. aste 2. travi 3. pilastri
L'esito delle verifiche è espresso con un codice come di seguito indicato
Ok: verifica con esito positivo
NV: verifica con esito negativo
Nr: verifica non richiesta.
Per comodità gli elementi vengono raggruppati in tabelle in relazione al tipo.

Ai fini delle verifiche (come da D.M. 14 Gennaio 2008 e circ. 2 Febbraio 2009 n.617) i tipi elementi differiscono per i seguenti aspetti:

Verifica		*Aste*	*Travi*	*Pilastri*
4.2.3.1	*Classificazione*	*X*	*X*	*X*
4.2.4.1.2	*Trazione, Compressione*	*X*	*X*	*X*
	Taglio, Torsione		*X*	*X*
	Flessione,taglio e forza assiale		*X*	*X*
4.2.4.1.3.1	*Aste compresse*	*X*	*X*	*X*
4.2.4.1.3.2	*Instabilità flesso-torsionale*		*X*	*X*
4.2.4.1.3.3	*Membrature inflesse e compresse*		*X*	*X*

Ai fini delle verifiche per strutture dissipative (come da D.M. 14 Gennaio 2008 e circ. 2 Febbraio 2009 n.617 per strutture intelaiate e a controventi concentrici) si considerano le verifiche del capitolo 4 con azioni amplificate e le verifiche del capitolo 7:

Verifica		*Travi*	*Pilastri*
4.2.4.1.2	*Trazione, Compressione*	*X*	*X*
	Taglio, Torsione		*X*
	Flessione,taglio e forza assiale	*X*	*X*
4.2.4.1.3.1	*Aste compresse*	*X*	*X*
4.2.4.1.3.2	*Instabilità flesso-torsionale*		*X*
7.5.3	*Sfruttamento per momento*	*X*	
7.5.4	*Sfruttamento per sforzo normale*	*X*	
7.5.5	*Sfruttamento per taglio da capacità flessionale*	*X*	
7.5.9	*Sfruttamento per taglio amplificato*		*X*

Viene inoltre riportata la verifica del par. 7.5.4.3 Gerarchia delle resistenze trave-colonna per ogni colonna, considerando piede e testa in entrambe le direzioni globali X e Y.

L' insieme delle verifiche sopra riportate è condotto sugli elementi purché dotati di sezione idonea come da tabella seguente:

	Azione	*SEZIONI GENERICHE*	PROFILI SEMPLICI	*PROFILI ACCOPPIATI*
4.2.3.1	*Classificazione automatica*	*L, doppio T, C, rettangolare cava, circolare cava*	*Tutti*	*Da profilo semplice*
4.2.3.1	*Classificazione di default 2*	*Circolare*		
4.2.3.1	*Classificazione di default 3*	*restanti*		
4.2.4.1.2	*Trazione*	*si*	*si*	*si*
4.2.4.1.2	*Compressione*	*si*	*si*	*si*
4.2.4.1.2	*Taglio, Torsione*	*si*	*si*	*si*
4.2.4.1.2	*Flessione,taglio e forza assiale*	*si*	*si*	*si*
4.2.4.1.3.1	*Aste compresse*	*si*	*si*	*per elementi ravvicinati e a croce o coppie calastrellate*
4.2.4.1.3.2	*Travi inflesse*	*doppio T simmetrica*	*doppio T*	*no*

Le verifiche sono riportate in tabelle con il significato sotto indicato; le verifiche sono espresse dal rapporto tra l' azione di progetto e la capacità ultima, pertanto la verifica ha esito positivo per rapporti non superiori all' unità.

Asta *Trave* *Pilastro*	*numero dell'elemento*
Stato	*codice di verifica per resistenza, stabilità, svergolamento*
Note	*sezione e materiali adottati per l'elemento*
V N	*(ASTE) verifica come da par. 4.2.4.1.2 per punto (4.2.6) e (4.2.10)*
V V/T	*(TRAVI E PILASTRI) verifica di resistenza come da par. 4.2.4.1.2 per azioni taglio-torsione (4.2.17 e 4.2.29)*
V N/M	*(TRAVI E PILASTRI) verifica di resistenza come da par. 4.2.4.1.2 per azioni composte (4.2.34) con riduzione per taglio (4.2.41) ove richiesto*
N M3 M2 V2 V3 T	*sollecitazioni di interesse per la verifica*
V stab	*(ASTE) verifica come da par. 4.2.4.1.3 per punto (4.2.42)*
V stab	*(TRAVI E PILASTRI) verifica come da par. 4.2.4.1.3 per punti (C4.2.32) o (C4.2.36) (membrature inflesse e compresse senza/con presenza di instabilità flesso-torsionale*
BetaxL B22xL B33xL	*lunghezze libere di inflessione (se indicato riferiti al piano di normale 22 o 33 rispettivamente)*
Snellezza	*snellezza massima*
Classe	*classe del profilo*
Chi mn	*coefficiente di riduzione (della capacità) per la modalità di instabilità pertinente*
Rif. cmb	*combinazioni in cui si sono rispettivamente attinti i valori di verifica più elevati*
V flst	*(TRAVI E PILASTRI) verifica di stabilità come da par. 4.2.4.1.3.2 per punto (4.2.49)*
B1-1 x L	*Beta1-1 x L: interasse tra i ritegni torsionali*
Chi LT	*coefficiente di riduzione (della capacità) per la modalità di instabilità flesso-torsionale*
Snell adim	*Valore della snellezza adimensionale, utilizzato per il controllo previsto al par. 7.5.5*
v.Omeg	*Valore del rapporto capacità/domanda per l' azione di interesse (momento per travi e azione assiale per aste) utilizzato per l' amplificazione delle azioni*
f.Om. N	*Fattore di amplificazione delle azioni assiali per travi e colonne (prodotto di 1.1 x Omega x gamma rd materiale); utilizzato come specificato al par. 7.5.5*
f.Om. T	*Fattore di amplificazione delle azioni (assiali, flettenti e taglianti) per colonne (prodotto di 1.1 x Omega x gamma rd materiale); utilizzato come specificato al par. 7.5.4*
V.7.5.3 M Ed	*Verifica come prevista al punto 7.5.3 e valore dell' azione flettente*
V.7.5.4 N Ed	*Verifica come prevista al punto 7.5.4 e valore dell' azione assiale*
V.7.5.5 V Ed,G V Ed,M	*Verifica come prevista al punto 7.5.5 e valore dei tagli dovuti ai carichi e alla capacità*
V.7.5.9 V Ed	*Verifica come prevista al punto 7.5.9 e valore dell' azione di taglio*
sovr. Xi (Xf, Yi, Yf)	*Valore della sovraresistenza come prevista al par. 7.5.4.3 (i valori non sono normalizzati pertanto saranno maggiori uguali a gamma rd classe di duttilità)*

Pilas.	Stato	Note	V V/T	V N/M	V stab	Cl.	LamS 22	LamS 33	Snell.	Chi mn	V flst	LamS LT	Chi LT	Rif. cmb
1	oks=8,m=112.03e-03			0.06	0.18	1	1.7	1.1	151.8	0.25	0.02	0.5	1.00	24,21,2,21
2	oks=8,m=112.03e-03			0.06	0.18	1	1.7	1.1	151.8	0.25	0.02	0.5	1.00	18,19,2,19
3	oks=8,m=118.25e-03			0.08	0.18	1	1.7	1.1	151.8	0.25	0.06	0.5	1.00	28,23,2,26
4	oks=8,m=118.25e-03			0.08	0.18	1	1.7	1.1	151.8	0.25	0.06	0.5	1.00	32,17,2,32
5	oks=8,m=112.68e-03			0.05	0.16	1	1.7	1.1	151.8	0.25	0.02	0.5	1.00	17,24,2,17
6	oks=8,m=116.76e-03			0.07	0.16	1	1.7	1.1	151.8	0.25	0.05	0.5	1.00	17,32,2,17
7	oks=8,m=116.90e-03			0.07	0.17	1	1.7	1.1	151.8	0.25	0.05	0.5	1.00	23,26,2,23
8	oks=8,m=112.68e-03			0.05	0.16	1	1.7	1.1	151.8	0.25	0.02	0.5	1.00	23,18,2,23

Pilas.	V V/T	V N/M	V stab	LamS 22	LamS 33	Snell.	Chi mn	V flst	LamS LT	Chi LT
							0.25			1.00
	8.25e-03	0.08	0.18	1.75	1.06	151.81		0.06	0.52	

Pilas.	f.Om. N	f.Om. T	Stato	V V/T	V N/M	V stab	V flst	Rif. cmb	V.7.5.9	V Edsovr. kN	Xisovr.	Xfsovr.	Yisovr.	Yf
1	0.0	0.0	ok	0.0	0.0			0,0,0,0						
2	0.0	0.0	ok	0.0	0.0			0,0,0,0						
3	0.0	0.0	ok	0.0	0.0			0,0,0,0						
4	0.0	0.0	ok	0.0	0.0			0,0,0,0						
5	0.0	0.0	ok	0.0	0.0			0,0,0,0						
6	0.0	0.0	ok	0.0	0.0			0,0,0,0						
7	0.0	0.0	ok	0.0	0.0			0,0,0,0						
8	0.0	0.0	ok	0.0	0.0			0,0,0,0						

Pilas.	V V/T	V N/M	V stab	V flst	V.7.5.9	V Edsovr.	Xisovr.	Xfsovr.	Yisovr.	Yf
	0.0	0.0								

18. STATI LIMITE D' ESERCIZIO

In tabella vengono riportati i valori di interesse per il controllo degli stati limite d'esercizio.

In particolare vengono riportati, in relazione al tipo di elemento strutturale, i risultati relativi alle tre categorie di combinazione considerate:
Combinazioni rare
Combinazioni frequenti
Combinazioni quasi permanenti.

I valori di interesse sono i seguenti:

rRfck	*rapporto tra la massima compressione nel calcestruzzo e la tensione fck in combinazioni rare [normalizzato a 1]*
rRfyk	*rapporto tra la massima tensione nell'acciaio e la tensione fyk in combinazioni rare [normalizzato a 1]*
rPfck	*rapporto tra la massima compressione nel calcestruzzo e la tensione fck in combinazioni quasi permanenti [normalizzato a 1]*
wR	*apertura caratteristica delle fessure in combinazioni rare [mm]*
wF	*apertura caratteristica delle fessure in combinazioni frequenti [mm]*
wP	*apertura caratteristica delle fessure in combinazioni quasi permanenti [mm]*
dR	*massima deformazione in combinazioni rare*
dF	*massima deformazione in combinazioni frequenti*
dP	*massima deformazione in combinazioni quasi permanenti*

Per ognuno dei nove valori soprariportati viene indicata (Rif.cmb) la combinazione in cui si è verificato.

In relazione al tipo di elemento strutturale i valori sono selezionati nel modo seguente:

pilastri	*rRfck*	*rRfyk*	*rPfck*	*per sezioni significative*
travi	*rRfck*	*rRfyk*	*rPfck*	*per sezioni significative*
	wR	*wF*	*wP*	*per sezioni significative*
	dR	*dF*	*dP*	*massimi in campata*
setti e gusci	*rRfck*	*rRfyk*	*rPfck*	*massimi nei nodi dell'elemento*
	wR	*wF*	*wP*	*massimi nei nodi dell'elemento*

Si precisa che i valori di massima deformazione per travi sono riferiti al piano verticale (piano locale 1-2 con momenti flettenti 3-3).

Setto	rRfck	rRfyk	rPfck	Rif. cmb	wR	wF	wP	Rif. cmb
					mm	mm	mm	
1	5.73e-03	0.04	7.92e-03	9,9,16	0.0	0.0	0.0	0,0,0
2	4.07e-03	3.48e-03	5.67e-03	9,9,16	0.0	0.0	0.0	0,0,0
3	6.19e-03	7.34e-03	7.46e-03	12,11,16	0.0	0.0	0.0	0,0,0
4	4.45e-03	3.23e-03	5.55e-03	12,12,16	0.0	0.0	0.0	0,0,0
5	8.97e-03	6.52e-03	0.01	12,12,16	0.0	0.0	0.0	0,0,0
6	7.18e-03	5.21e-03	9.05e-03	12,12,16	0.0	0.0	0.0	0,0,0
7	0.01	7.52e-03	0.01	12,12,16	0.0	0.0	0.0	0,0,0
8	8.86e-03	6.44e-03	0.01	12,12,16	0.0	0.0	0.0	0,0,0
9	0.01	7.92e-03	0.01	12,12,16	0.0	0.0	0.0	0,0,0
10	9.74e-03	7.08e-03	0.01	12,12,16	0.0	0.0	0.0	0,0,0
11	0.01	8.00e-03	0.01	12,12,16	0.0	0.0	0.0	0,0,0
12	0.01	7.33e-03	0.01	12,12,16	0.0	0.0	0.0	0,0,0
13	0.01	8.18e-03	0.01	12,12,16	0.0	0.0	0.0	0,0,0
14	0.01	7.35e-03	0.01	12,12,16	0.0	0.0	0.0	0,0,0
15	0.01	8.14e-03	0.01	12,12,16	0.0	0.0	0.0	0,0,0
16	0.01	7.30e-03	0.01	12,12,16	0.0	0.0	0.0	0,0,0
17	0.01	8.00e-03	0.01	12,12,16	0.0	0.0	0.0	0,0,0
18	9.93e-03	7.21e-03	0.01	12,12,16	0.0	0.0	0.0	0,0,0

19	0.01	7.83e-03	0.01	12,12,16	0.0	0.0	0.0	0,0,0
20	9.75e-03	7.08e-03	0.01	12,12,16	0.0	0.0	0.0	0,0,0
21	0.01	7.69e-03	0.01	12,12,16	0.0	0.0	0.0	0,0,0
22	9.62e-03	6.99e-03	0.01	12,12,16	0.0	0.0	0.0	0,0,0
23	0.01	7.59e-03	0.01	12,12,16	0.0	0.0	0.0	0,0,0
24	9.57e-03	6.95e-03	0.01	12,12,16	0.0	0.0	0.0	0,0,0
25	0.01	7.53e-03	0.01	12,12,16	0.0	0.0	0.0	0,0,0
26	9.59e-03	6.96e-03	0.01	12,12,16	0.0	0.0	0.0	0,0,0
27	0.01	7.53e-03	0.01	12,12,16	0.0	0.0	0.0	0,0,0
28	9.67e-03	7.02e-03	0.01	12,12,16	0.0	0.0	0.0	0,0,0
29	0.01	7.64e-03	0.01	12,12,16	0.0	0.0	0.0	0,0,0
30	9.81e-03	7.12e-03	0.01	12,12,16	0.0	0.0	0.0	0,0,0
31	0.01	7.79e-03	0.01	12,12,16	0.0	0.0	0.0	0,0,0
32	9.99e-03	7.26e-03	0.01	12,12,16	0.0	0.0	0.0	0,0,0
33	0.01	7.98e-03	0.01	12,12,16	0.0	0.0	0.0	0,0,0
34	0.01	7.43e-03	0.01	12,12,16	0.0	0.0	0.0	0,0,0
35	0.01	8.16e-03	0.01	12,12,16	0.0	0.0	0.0	0,0,0
36	0.01	7.60e-03	0.01	12,12,16	0.0	0.0	0.0	0,0,0
37	0.01	8.34e-03	0.01	12,12,16	0.0	0.0	0.0	0,0,0
38	0.01	7.69e-03	0.01	12,12,16	0.0	0.0	0.0	0,0,0
39	0.01	8.52e-03	0.02	12,12,16	0.0	0.0	0.0	0,0,0
40	0.01	7.66e-03	0.01	12,12,16	0.0	0.0	0.0	0,0,0
41	0.01	8.53e-03	0.02	12,12,16	0.0	0.0	0.0	0,0,0
42	0.01	8.12e-03	0.01	12,12,16	0.0	0.0	0.0	0,0,0
43	0.01	9.30e-03	0.01	12,12,16	0.0	0.0	0.0	0,0,0
44	9.73e-03	0.01	0.01	12,12,16	0.0	0.0	0.0	0,0,0
45	0.01	0.02	0.01	12,12,16	0.0	0.0	0.0	0,0,0
46	8.37e-03	0.01	0.01	12,12,16	0.0	0.0	0.0	0,0,0
47	7.72e-03	0.02	9.68e-03	12,12,16	0.0	0.0	0.0	0,0,0
48	6.14e-03	0.01	7.68e-03	12,12,16	0.0	0.0	0.0	0,0,0
49	4.37e-03	0.02	5.21e-03	12,11,16	0.0	0.0	0.0	0,0,0
50	3.81e-03	0.01	4.70e-03	12,12,16	0.0	0.0	0.0	0,0,0
51	3.00e-03	8.48e-03	4.04e-03	10,10,16	0.0	0.0	0.0	0,0,0
52	2.74e-03	0.01	3.68e-03	10,12,16	0.0	0.0	0.0	0,0,0
53	4.34e-03	5.89e-03	5.57e-03	12,12,16	0.0	0.0	0.0	0,0,0
54	4.11e-03	0.01	5.35e-03	12,12,16	0.0	0.0	0.0	0,0,0
55	6.16e-03	8.75e-03	7.80e-03	12,12,16	0.0	0.0	0.0	0,0,0
56	5.54e-03	0.01	7.17e-03	12,12,16	0.0	0.0	0.0	0,0,0
57	7.77e-03	0.01	0.01	12,12,16	0.0	0.0	0.0	0,0,0
58	6.95e-03	0.02	8.97e-03	12,12,16	0.0	0.0	0.0	0,0,0
59	8.74e-03	0.01	0.01	12,12,16	0.0	0.0	0.0	0,0,0
60	7.90e-03	0.02	0.01	12,12,16	0.0	0.0	0.0	0,0,0
61	9.23e-03	0.01	0.01	12,12,16	0.0	0.0	0.0	0,0,0
62	8.44e-03	0.02	0.01	12,12,16	0.0	0.0	0.0	0,0,0
63	9.39e-03	8.48e-03	0.01	12,10,16	0.0	0.0	0.0	0,0,0
64	8.68e-03	0.01	0.01	12,12,16	0.0	0.0	0.0	0,0,0
65	9.38e-03	6.81e-03	0.01	12,12,16	0.0	0.0	0.0	0,0,0
66	8.74e-03	0.01	0.01	12,12,16	0.0	0.0	0.0	0,0,0
67	9.28e-03	6.74e-03	0.01	12,12,16	0.0	0.0	0.0	0,0,0
68	8.70e-03	0.01	0.01	12,12,16	0.0	0.0	0.0	0,0,0
69	9.17e-03	6.66e-03	0.01	12,12,16	0.0	0.0	0.0	0,0,0
70	8.63e-03	7.94e-03	0.01	12,12,16	0.0	0.0	0.0	0,0,0
71	9.08e-03	6.59e-03	0.01	12,12,16	0.0	0.0	0.0	0,0,0
72	8.57e-03	6.22e-03	0.01	12,12,16	0.0	0.0	0.0	0,0,0
73	9.05e-03	6.57e-03	0.01	12,12,16	0.0	0.0	0.0	0,0,0
74	8.54e-03	6.20e-03	0.01	12,12,16	0.0	0.0	0.0	0,0,0
75	9.06e-03	6.58e-03	0.01	12,12,16	0.0	0.0	0.0	0,0,0
76	8.56e-03	6.21e-03	0.01	12,12,16	0.0	0.0	0.0	0,0,0

77	9.13e-03	6.63e-03	0.01	12,12,16	0.0	0.0	0.0	0,0,0
78	8.62e-03	6.26e-03	0.01	12,12,16	0.0	0.0	0.0	0,0,0
79	9.26e-03	6.72e-03	0.01	12,12,16	0.0	0.0	0.0	0,0,0
80	8.74e-03	6.35e-03	0.01	12,12,16	0.0	0.0	0.0	0,0,0
81	9.44e-03	6.86e-03	0.01	12,12,16	0.0	0.0	0.0	0,0,0
82	8.89e-03	6.45e-03	0.01	12,12,16	0.0	0.0	0.0	0,0,0
83	9.64e-03	7.00e-03	0.01	12,12,16	0.0	0.0	0.0	0,0,0
84	9.03e-03	6.56e-03	0.01	12,12,16	0.0	0.0	0.0	0,0,0
85	9.80e-03	7.12e-03	0.01	12,12,16	0.0	0.0	0.0	0,0,0
86	9.13e-03	6.63e-03	0.01	12,12,16	0.0	0.0	0.0	0,0,0
87	9.82e-03	7.13e-03	0.01	12,12,16	0.0	0.0	0.0	0,0,0
88	9.09e-03	6.69e-03	0.01	12,11,16	0.0	0.0	0.0	0,0,0
89	9.70e-03	7.84e-03	0.01	12,12,16	0.0	0.0	0.0	0,0,0
90	8.95e-03	9.53e-03	0.01	12,12,16	0.0	0.0	0.0	0,0,0
91	9.43e-03	0.01	0.01	12,12,16	0.0	0.0	0.0	0,0,0
92	8.63e-03	0.01	0.01	12,12,16	0.0	0.0	0.0	0,0,0
93	8.73e-03	0.01	0.01	12,12,16	0.0	0.0	0.0	0,0,0
94	7.95e-03	0.02	0.01	12,12,16	0.0	0.0	0.0	0,0,0
95	7.44e-03	0.02	9.50e-03	12,12,16	0.0	0.0	0.0	0,0,0
96	6.79e-03	0.02	8.66e-03	12,12,16	0.0	0.0	0.0	0,0,0
97	5.62e-03	0.02	7.10e-03	12,12,16	0.0	0.0	0.0	0,0,0
98	5.26e-03	0.02	6.64e-03	12,12,16	0.0	0.0	0.0	0,0,0
99	3.65e-03	0.02	4.50e-03	12,12,16	0.0	0.0	0.0	0,0,0
100	3.45e-03	0.02	4.24e-03	12,12,16	0.0	0.0	0.0	0,0,0
101	3.31e-03	0.02	4.05e-03	12,12,16	0.0	0.0	0.0	0,0,0
102	3.41e-03	0.03	4.15e-03	12,12,16	0.0	0.0	0.0	0,0,0
103	4.99e-03	0.02	6.29e-03	12,12,16	0.0	0.0	0.0	0,0,0
104	4.81e-03	0.02	6.03e-03	12,12,16	0.0	0.0	0.0	0,0,0
105	6.22e-03	0.02	7.92e-03	12,12,16	0.0	0.0	0.0	0,0,0
106	5.73e-03	0.02	7.28e-03	12,12,16	0.0	0.0	0.0	0,0,0
107	7.23e-03	0.02	9.30e-03	12,12,16	0.0	0.0	0.0	0,0,0
108	6.55e-03	0.02	8.42e-03	12,12,16	0.0	0.0	0.0	0,0,0
109	7.85e-03	0.01	0.01	12,12,16	0.0	0.0	0.0	0,0,0
110	7.09e-03	0.01	9.19e-03	12,12,16	0.0	0.0	0.0	0,0,0
111	8.18e-03	0.01	0.01	12,12,16	0.0	0.0	0.0	0,0,0
112	7.41e-03	0.01	9.66e-03	12,11,16	0.0	0.0	0.0	0,0,0
113	8.35e-03	7.84e-03	0.01	12,11,16	0.0	0.0	0.0	0,0,0
114	7.61e-03	8.15e-03	9.89e-03	12,11,16	0.0	0.0	0.0	0,0,0
115	8.43e-03	6.12e-03	0.01	12,12,16	0.0	0.0	0.0	0,0,0
116	7.71e-03	6.55e-03	0.01	12,11,16	0.0	0.0	0.0	0,0,0
117	8.39e-03	6.10e-03	0.01	12,12,16	0.0	0.0	0.0	0,0,0
118	7.71e-03	5.62e-03	0.01	12,11,16	0.0	0.0	0.0	0,0,0
119	8.30e-03	6.03e-03	0.01	12,12,16	0.0	0.0	0.0	0,0,0
120	7.66e-03	6.64e-03	0.01	12,11,16	0.0	0.0	0.0	0,0,0
121	8.19e-03	5.95e-03	0.01	12,12,16	0.0	0.0	0.0	0,0,0
122	7.60e-03	8.39e-03	9.97e-03	12,11,16	0.0	0.0	0.0	0,0,0
123	8.10e-03	6.07e-03	0.01	12,11,16	0.0	0.0	0.0	0,0,0
124	7.54e-03	0.01	9.91e-03	12,11,16	0.0	0.0	0.0	0,0,0
125	8.04e-03	7.58e-03	0.01	12,11,16	0.0	0.0	0.0	0,0,0
126	7.50e-03	0.01	9.86e-03	12,11,16	0.0	0.0	0.0	0,0,0
127	8.03e-03	9.31e-03	0.01	12,11,16	0.0	0.0	0.0	0,0,0
128	7.49e-03	0.01	9.85e-03	12,12,16	0.0	0.0	0.0	0,0,0
129	8.04e-03	0.01	0.01	12,12,16	0.0	0.0	0.0	0,0,0
130	7.50e-03	0.02	9.87e-03	12,12,16	0.0	0.0	0.0	0,0,0
131	8.08e-03	0.01	0.01	12,12,16	0.0	0.0	0.0	0,0,0
132	7.51e-03	0.02	9.90e-03	12,12,16	0.0	0.0	0.0	0,0,0
133	8.11e-03	0.02	0.01	12,12,16	0.0	0.0	0.0	0,0,0
134	7.51e-03	0.02	9.90e-03	12,12,16	0.0	0.0	0.0	0,0,0

135	8.10e-03	0.02	0.01	12,12,16	0.0	0.0	0.0	0,0,0
136	7.47e-03	0.02	9.83e-03	12,12,16	0.0	0.0	0.0	0,0,0
137	7.99e-03	0.02	0.01	12,12,16	0.0	0.0	0.0	0,0,0
138	7.32e-03	0.02	9.63e-03	12,12,16	0.0	0.0	0.0	0,0,0
139	7.70e-03	0.02	0.01	12,12,16	0.0	0.0	0.0	0,0,0
140	7.01e-03	0.02	9.20e-03	12,12,16	0.0	0.0	0.0	0,0,0
141	7.14e-03	0.02	9.32e-03	12,12,16	0.0	0.0	0.0	0,0,0
142	6.47e-03	0.02	8.47e-03	12,12,16	0.0	0.0	0.0	0,0,0
143	6.26e-03	0.02	8.12e-03	12,12,16	0.0	0.0	0.0	0,0,0
144	5.65e-03	0.02	7.38e-03	12,12,16	0.0	0.0	0.0	0,0,0
145	5.08e-03	0.02	6.63e-03	12,12,16	0.0	0.0	0.0	0,0,0
146	4.62e-03	0.02	6.08e-03	12,12,16	0.0	0.0	0.0	0,0,0
147	3.82e-03	0.02	5.02e-03	12,12,16	0.0	0.0	0.0	0,0,0
148	3.50e-03	0.02	4.63e-03	12,12,16	0.0	0.0	0.0	0,0,0
149	2.46e-03	0.02	3.31e-03	10,10,16	0.0	0.0	0.0	0,0,0
150	2.25e-03	0.03	3.03e-03	10,10,16	0.0	0.0	0.0	0,0,0
151	2.30e-03	0.03	3.06e-03	10,10,16	0.0	0.0	0.0	0,0,0
152	2.91e-03	0.04	3.72e-03	12,10,16	0.0	0.0	0.0	0,0,0
153	3.03e-03	0.03	4.02e-03	12,12,16	0.0	0.0	0.0	0,0,0
154	2.63e-03	0.03	3.53e-03	10,12,16	0.0	0.0	0.0	0,0,0
155	4.12e-03	0.03	5.46e-03	12,12,16	0.0	0.0	0.0	0,0,0
156	3.67e-03	0.03	4.91e-03	10,12,16	0.0	0.0	0.0	0,0,0
157	5.06e-03	0.03	6.71e-03	12,12,16	0.0	0.0	0.0	0,0,0
158	4.59e-03	0.03	6.11e-03	10,12,16	0.0	0.0	0.0	0,0,0
159	5.82e-03	0.03	7.65e-03	12,12,16	0.0	0.0	0.0	0,0,0
160	5.22e-03	0.03	6.94e-03	10,12,16	0.0	0.0	0.0	0,0,0
161	6.33e-03	0.03	8.34e-03	12,12,16	0.0	0.0	0.0	0,0,0
162	5.67e-03	0.03	7.50e-03	12,12,16	0.0	0.0	0.0	0,0,0
163	6.64e-03	0.03	8.76e-03	12,12,16	0.0	0.0	0.0	0,0,0
164	5.96e-03	0.03	7.89e-03	12,12,16	0.0	0.0	0.0	0,0,0
165	6.81e-03	0.03	8.99e-03	12,12,16	0.0	0.0	0.0	0,0,0
166	6.14e-03	0.03	8.12e-03	12,12,16	0.0	0.0	0.0	0,0,0
167	6.88e-03	0.03	9.09e-03	12,12,16	0.0	0.0	0.0	0,0,0
168	6.23e-03	0.03	8.27e-03	10,12,16	0.0	0.0	0.0	0,0,0
169	6.91e-03	0.02	9.12e-03	12,12,16	0.0	0.0	0.0	0,0,0
170	6.30e-03	0.03	8.36e-03	10,12,16	0.0	0.0	0.0	0,0,0
171	6.91e-03	0.02	9.12e-03	12,12,16	0.0	0.0	0.0	0,0,0
172	6.36e-03	0.03	8.42e-03	10,12,16	0.0	0.0	0.0	0,0,0
173	6.91e-03	0.02	9.12e-03	12,12,16	0.0	0.0	0.0	0,0,0
174	6.40e-03	0.03	8.48e-03	10,12,16	0.0	0.0	0.0	0,0,0
175	6.91e-03	0.02	9.11e-03	12,11,16	0.0	0.0	0.0	0,0,0
176	6.41e-03	0.02	8.49e-03	10,12,16	0.0	0.0	0.0	0,0,0
177	6.92e-03	0.01	9.11e-03	12,11,16	0.0	0.0	0.0	0,0,0
178	6.38e-03	0.02	8.45e-03	10,11,16	0.0	0.0	0.0	0,0,0
179	6.94e-03	0.01	9.13e-03	12,11,16	0.0	0.0	0.0	0,0,0
180	6.31e-03	0.02	8.36e-03	10,11,16	0.0	0.0	0.0	0,0,0
181	6.95e-03	9.26e-03	9.13e-03	12,11,16	0.0	0.0	0.0	0,0,0
182	6.20e-03	0.01	8.21e-03	10,11,16	0.0	0.0	0.0	0,0,0
183	6.95e-03	6.31e-03	9.11e-03	12,11,16	0.0	0.0	0.0	0,0,0
184	6.11e-03	7.70e-03	8.07e-03	10,11,16	0.0	0.0	0.0	0,0,0
185	6.91e-03	6.12e-03	9.03e-03	12,11,16	0.0	0.0	0.0	0,0,0
186	6.01e-03	4.80e-03	7.92e-03	12,11,16	0.0	0.0	0.0	0,0,0
187	6.79e-03	6.67e-03	8.86e-03	12,11,16	0.0	0.0	0.0	0,0,0
188	5.87e-03	4.26e-03	7.71e-03	12,12,16	0.0	0.0	0.0	0,0,0
189	6.59e-03	7.92e-03	8.60e-03	12,11,16	0.0	0.0	0.0	0,0,0
190	5.68e-03	4.13e-03	7.43e-03	12,12,16	0.0	0.0	0.0	0,0,0
191	6.30e-03	9.89e-03	8.17e-03	12,11,16	0.0	0.0	0.0	0,0,0
192	5.43e-03	3.95e-03	7.04e-03	12,12,16	0.0	0.0	0.0	0,0,0

193	5.86e-03	0.01	7.52e-03	12,11,16	0.0	0.0	0.0	0,0,0
194	5.37e-03	5.96e-03	6.87e-03	12,11,16	0.0	0.0	0.0	0,0,0
195	5.31e-03	0.02	6.64e-03	12,12,16	0.0	0.0	0.0	0,0,0
196	5.53e-03	0.01	7.00e-03	12,11,16	0.0	0.0	0.0	0,0,0
197	4.83e-03	0.02	5.94e-03	12,12,16	0.0	0.0	0.0	0,0,0
198	6.26e-03	0.02	7.89e-03	12,12,16	0.0	0.0	0.0	0,0,0
199	4.34e-03	0.03	5.28e-03	12,12,16	0.0	0.0	0.0	0,0,0
200	7.52e-03	0.03	9.36e-03	12,12,16	0.0	0.0	0.0	0,0,0
201	0.03	0.03	0.04	10,9,16	0.0	0.0	0.0	0,0,0
202	0.02	0.01	0.03	9,9,16	0.0	0.0	0.0	0,0,0
203	0.03	0.02	0.04	9,9,16	0.0	0.0	0.0	0,0,0
204	0.02	0.01	0.03	9,9,16	0.0	0.0	0.0	0,0,0
205	0.02	0.01	0.03	10,10,16	0.0	0.0	0.0	0,0,0
206	0.02	0.01	0.02	10,10,16	0.0	0.0	0.0	0,0,0
207	0.02	0.01	0.02	12,10,16	0.0	0.0	0.0	0,0,0
208	0.02	9.41e-03	0.02	12,10,16	0.0	0.0	0.0	0,0,0
209	0.01	0.02	0.02	10,10,16	0.0	0.0	0.0	0,0,0
210	0.01	0.01	0.02	12,10,16	0.0	0.0	0.0	0,0,0
211	0.02	0.02	0.02	10,10,16	0.0	0.0	0.0	0,0,0
212	0.01	0.02	0.02	10,10,16	0.0	0.0	0.0	0,0,0
213	0.02	0.03	0.02	10,10,16	0.0	0.0	0.0	0,0,0
214	0.01	0.02	0.02	10,10,16	0.0	0.0	0.0	0,0,0
215	0.02	0.03	0.03	10,10,16	0.0	0.0	0.0	0,0,0
216	0.02	0.02	0.02	10,10,16	0.0	0.0	0.0	0,0,0
217	0.02	0.04	0.03	10,10,16	0.0	0.0	0.0	0,0,0
218	0.02	0.02	0.02	12,10,16	0.0	0.0	0.0	0,0,0
219	0.03	0.04	0.04	10,10,16	0.0	0.0	0.0	0,0,0
220	0.01	0.01	0.02	12,10,16	0.0	0.0	0.0	0,0,0
221	0.03	0.04	0.04	10,10,16	0.0	0.0	0.0	0,0,0
222	0.01	0.01	0.02	12,10,16	0.0	0.0	0.0	0,0,0
223	0.02	0.04	0.03	10,10,16	0.0	0.0	0.0	0,0,0
224	0.02	0.02	0.02	12,10,16	0.0	0.0	0.0	0,0,0
225	0.02	0.03	0.03	10,10,16	0.0	0.0	0.0	0,0,0
226	0.02	0.02	0.02	10,10,16	0.0	0.0	0.0	0,0,0
227	0.02	0.03	0.02	10,10,16	0.0	0.0	0.0	0,0,0
228	0.01	0.02	0.02	10,10,16	0.0	0.0	0.0	0,0,0
229	0.02	0.02	0.02	10,10,16	0.0	0.0	0.0	0,0,0
230	0.01	0.02	0.02	10,10,16	0.0	0.0	0.0	0,0,0
231	0.01	0.02	0.02	12,10,16	0.0	0.0	0.0	0,0,0
232	0.01	0.01	0.02	12,10,16	0.0	0.0	0.0	0,0,0
233	0.02	0.01	0.02	12,10,16	0.0	0.0	0.0	0,0,0
234	0.02	9.43e-03	0.02	12,10,16	0.0	0.0	0.0	0,0,0
235	0.02	0.01	0.03	10,10,16	0.0	0.0	0.0	0,0,0
236	0.02	0.01	0.02	10,10,16	0.0	0.0	0.0	0,0,0
237	0.03	0.02	0.04	9,9,16	0.0	0.0	0.0	0,0,0
238	0.02	0.01	0.03	9,9,16	0.0	0.0	0.0	0,0,0
239	0.03	0.03	0.04	10,9,16	0.0	0.0	0.0	0,0,0
240	0.02	0.01	0.03	9,9,16	0.0	0.0	0.0	0,0,0
241	0.02	0.01	0.02	10,10,16	0.0	0.0	0.0	0,0,0
242	0.02	0.01	0.03	10,10,16	0.0	0.0	0.0	0,0,0
243	0.02	0.01	0.02	10,10,16	0.0	0.0	0.0	0,0,0
244	0.02	0.01	0.02	10,10,16	0.0	0.0	0.0	0,0,0
245	0.02	9.65e-03	0.02	10,10,16	0.0	0.0	0.0	0,0,0
246	0.02	0.01	0.02	10,10,16	0.0	0.0	0.0	0,0,0
247	0.01	8.43e-03	0.02	10,10,16	0.0	0.0	0.0	0,0,0
248	0.01	8.66e-03	0.02	10,10,16	0.0	0.0	0.0	0,0,0
249	0.01	7.21e-03	0.02	10,10,16	0.0	0.0	0.0	0,0,0
250	0.01	7.18e-03	0.02	10,10,16	0.0	0.0	0.0	0,0,0

251	0.01	0.01	0.02	10,10,16	0.0	0.0	0.0	0,0,0
252	9.68e-03	5.82e-03	0.01	10,10,16	0.0	0.0	0.0	0,0,0
253	0.01	0.01	0.02	10,10,16	0.0	0.0	0.0	0,0,0
254	0.01	0.01	0.02	10,10,16	0.0	0.0	0.0	0,0,0
255	0.02	0.02	0.02	10,10,16	0.0	0.0	0.0	0,0,0
256	0.02	0.02	0.02	10,10,16	0.0	0.0	0.0	0,0,0
257	0.02	0.02	0.03	12,10,16	0.0	0.0	0.0	0,0,0
258	0.03	0.03	0.03	12,12,16	0.0	0.0	0.0	0,0,0
259	0.03	0.03	0.03	12,12,16	0.0	0.0	0.0	0,0,0
260	0.04	0.05	0.05	12,12,16	0.0	0.0	0.0	0,0,0
261	0.03	0.03	0.03	12,12,16	0.0	0.0	0.0	0,0,0
262	0.04	0.05	0.05	12,12,16	0.0	0.0	0.0	0,0,0
263	0.02	0.02	0.03	12,10,16	0.0	0.0	0.0	0,0,0
264	0.03	0.03	0.03	12,12,16	0.0	0.0	0.0	0,0,0
265	0.02	0.02	0.02	10,10,16	0.0	0.0	0.0	0,0,0
266	0.02	0.02	0.02	10,10,16	0.0	0.0	0.0	0,0,0
267	0.01	0.01	0.02	10,10,16	0.0	0.0	0.0	0,0,0
268	0.01	0.01	0.02	10,10,16	0.0	0.0	0.0	0,0,0
269	0.01	0.01	0.02	10,10,16	0.0	0.0	0.0	0,0,0
270	9.69e-03	5.82e-03	0.01	10,10,16	0.0	0.0	0.0	0,0,0
271	0.01	7.21e-03	0.02	10,10,16	0.0	0.0	0.0	0,0,0
272	0.01	7.19e-03	0.02	10,10,16	0.0	0.0	0.0	0,0,0
273	0.01	8.43e-03	0.02	10,10,16	0.0	0.0	0.0	0,0,0
274	0.01	8.67e-03	0.02	10,10,16	0.0	0.0	0.0	0,0,0
275	0.02	9.66e-03	0.02	10,10,16	0.0	0.0	0.0	0,0,0
276	0.02	0.01	0.02	10,10,16	0.0	0.0	0.0	0,0,0
277	0.02	0.01	0.02	10,10,16	0.0	0.0	0.0	0,0,0
278	0.02	0.01	0.02	10,10,16	0.0	0.0	0.0	0,0,0
279	0.02	0.01	0.02	10,10,16	0.0	0.0	0.0	0,0,0
280	0.02	0.01	0.03	10,10,16	0.0	0.0	0.0	0,0,0
281	0.04	0.06	0.06	12,12,16	0.0	0.0	0.0	0,0,0
282	0.04	0.07	0.06	10,12,16	0.0	0.0	0.0	0,0,0
283	0.03	0.03	0.04	12,12,16	0.0	0.0	0.0	0,0,0
284	0.03	0.03	0.04	12,12,16	0.0	0.0	0.0	0,0,0
285	0.02	0.02	0.02	10,10,16	0.0	0.0	0.0	0,0,0
286	0.02	0.01	0.02	10,12,16	0.0	0.0	0.0	0,0,0
287	0.01	6.66e-03	0.02	10,10,16	0.0	0.0	0.0	0,0,0
288	0.02	9.79e-03	0.02	10,10,16	0.0	0.0	0.0	0,0,0
289	0.01	6.50e-03	0.02	10,10,16	0.0	0.0	0.0	0,0,0
290	0.02	0.01	0.03	10,10,16	0.0	0.0	0.0	0,0,0
291	0.02	8.43e-03	0.02	10,10,16	0.0	0.0	0.0	0,0,0
292	0.03	0.02	0.04	10,12,16	0.0	0.0	0.0	0,0,0
293	0.02	0.01	0.02	10,10,16	0.0	0.0	0.0	0,0,0
294	0.03	0.02	0.04	10,12,16	0.0	0.0	0.0	0,0,0
295	0.02	0.01	0.03	10,10,16	0.0	0.0	0.0	0,0,0
296	0.04	0.02	0.05	10,12,16	0.0	0.0	0.0	0,0,0
297	0.02	0.01	0.03	10,10,16	0.0	0.0	0.0	0,0,0
298	0.04	0.02	0.05	10,10,16	0.0	0.0	0.0	0,0,0
299	0.03	0.01	0.03	10,10,16	0.0	0.0	0.0	0,0,0
300	0.04	0.02	0.05	10,10,16	0.0	0.0	0.0	0,0,0
301	0.04	0.06	0.06	12,12,16	0.0	0.0	0.0	0,0,0
302	0.04	0.07	0.06	10,12,16	0.0	0.0	0.0	0,0,0
303	0.03	0.03	0.04	12,12,16	0.0	0.0	0.0	0,0,0
304	0.03	0.03	0.04	12,12,16	0.0	0.0	0.0	0,0,0
305	0.02	0.02	0.02	10,10,16	0.0	0.0	0.0	0,0,0
306	0.02	0.01	0.02	10,12,16	0.0	0.0	0.0	0,0,0
307	0.01	6.64e-03	0.02	10,10,16	0.0	0.0	0.0	0,0,0
308	0.02	9.78e-03	0.02	10,10,16	0.0	0.0	0.0	0,0,0

309	0.01	6.50e-03	0.02	10,10,16	0.0	0.0	0.0	0,0,0
310	0.02	0.01	0.03	10,10,16	0.0	0.0	0.0	0,0,0
311	0.02	8.42e-03	0.02	10,10,16	0.0	0.0	0.0	0,0,0
312	0.03	0.02	0.04	10,12,16	0.0	0.0	0.0	0,0,0
313	0.02	0.01	0.02	10,10,16	0.0	0.0	0.0	0,0,0
314	0.03	0.02	0.04	10,12,16	0.0	0.0	0.0	0,0,0
315	0.02	0.01	0.03	10,10,16	0.0	0.0	0.0	0,0,0
316	0.04	0.02	0.05	10,12,16	0.0	0.0	0.0	0,0,0
317	0.02	0.01	0.03	10,10,16	0.0	0.0	0.0	0,0,0
318	0.04	0.02	0.05	10,10,16	0.0	0.0	0.0	0,0,0
319	0.03	0.01	0.03	10,10,16	0.0	0.0	0.0	0,0,0
320	0.04	0.02	0.05	10,10,16	0.0	0.0	0.0	0,0,0
321	0.07	0.05	0.09	10,10,16	0.0	0.0	0.0	0,0,0
322	0.21	0.40	0.28	12,12,16	0.0	0.0	0.0	0,0,0
323	0.07	0.08	0.09	10,10,16	0.0	0.0	0.0	0,0,0
324	0.13	0.20	0.17	10,10,16	0.0	0.0	0.0	0,0,0
325	0.06	0.07	0.09	10,10,16	0.0	0.0	0.0	0,0,0
326	0.09	0.17	0.12	10,10,16	0.0	0.0	0.0	0,0,0
327	0.06	0.07	0.07	10,10,16	0.0	0.0	0.0	0,0,0
328	0.08	0.14	0.10	10,10,16	0.0	0.0	0.0	0,0,0
329	0.05	0.06	0.06	10,10,16	0.0	0.0	0.0	0,0,0
330	0.06	0.11	0.08	10,10,16	0.0	0.0	0.0	0,0,0
331	0.04	0.05	0.05	10,10,16	0.0	0.0	0.0	0,0,0
332	0.05	0.08	0.06	10,10,16	0.0	0.0	0.0	0,0,0
333	0.03	0.04	0.04	10,10,16	0.0	0.0	0.0	0,0,0
334	0.04	0.07	0.06	10,10,16	0.0	0.0	0.0	0,0,0
335	0.02	0.03	0.03	10,10,16	0.0	0.0	0.0	0,0,0
336	0.03	0.06	0.05	10,10,16	0.0	0.0	0.0	0,0,0
337	0.03	0.04	0.04	10,12,16	0.0	0.0	0.0	0,0,0
338	0.02	0.05	0.03	10,10,16	0.0	0.0	0.0	0,0,0
339	0.04	0.07	0.06	10,12,16	0.0	0.0	0.0	0,0,0
340	0.03	0.06	0.05	10,10,16	0.0	0.0	0.0	0,0,0
341	0.04	0.07	0.06	10,12,16	0.0	0.0	0.0	0,0,0
342	0.03	0.06	0.05	10,10,16	0.0	0.0	0.0	0,0,0
343	0.03	0.04	0.04	10,12,16	0.0	0.0	0.0	0,0,0
344	0.02	0.04	0.03	10,10,16	0.0	0.0	0.0	0,0,0
345	0.02	0.03	0.03	10,10,16	0.0	0.0	0.0	0,0,0
346	0.03	0.06	0.04	10,10,16	0.0	0.0	0.0	0,0,0
347	0.03	0.04	0.04	10,10,16	0.0	0.0	0.0	0,0,0
348	0.04	0.07	0.06	10,10,16	0.0	0.0	0.0	0,0,0
349	0.04	0.05	0.05	10,10,16	0.0	0.0	0.0	0,0,0
350	0.05	0.08	0.06	10,10,16	0.0	0.0	0.0	0,0,0
351	0.05	0.06	0.06	10,10,16	0.0	0.0	0.0	0,0,0
352	0.06	0.11	0.08	10,10,16	0.0	0.0	0.0	0,0,0
353	0.06	0.07	0.07	10,10,16	0.0	0.0	0.0	0,0,0
354	0.08	0.14	0.10	10,10,16	0.0	0.0	0.0	0,0,0
355	0.06	0.07	0.09	10,10,16	0.0	0.0	0.0	0,0,0
356	0.09	0.17	0.12	10,10,16	0.0	0.0	0.0	0,0,0
357	0.07	0.08	0.09	10,10,16	0.0	0.0	0.0	0,0,0
358	0.13	0.20	0.17	10,10,16	0.0	0.0	0.0	0,0,0
359	0.07	0.05	0.09	10,10,16	0.0	0.0	0.0	0,0,0
360	0.21	0.40	0.28	12,12,16	0.0	0.0	0.0	0,0,0
361	8.40e-03	0.02	0.01	12,10,16	0.0	0.0	0.0	0,0,0
362	0.02	0.01	0.02	12,12,16	0.0	0.0	0.0	0,0,0
363	8.35e-03	0.02	0.01	10,10,16	0.0	0.0	0.0	0,0,0
364	0.01	9.07e-03	0.01	10,10,16	0.0	0.0	0.0	0,0,0
365	8.66e-03	0.02	0.01	10,10,16	0.0	0.0	0.0	0,0,0
366	8.80e-03	9.47e-03	0.01	10,10,16	0.0	0.0	0.0	0,0,0

367	0.01	0.01	0.01	12,10,16	0.0	0.0	0.0	0,0,0
368	9.64e-03	9.22e-03	0.01	10,10,16	0.0	0.0	0.0	0,0,0
369	0.01	0.02	0.02	12,10,16	0.0	0.0	0.0	0,0,0
370	0.01	7.73e-03	0.02	10,10,16	0.0	0.0	0.0	0,0,0
371	0.02	0.01	0.02	10,10,16	0.0	0.0	0.0	0,0,0
372	0.01	8.46e-03	0.02	10,10,16	0.0	0.0	0.0	0,0,0
373	0.02	0.01	0.03	10,10,16	0.0	0.0	0.0	0,0,0
374	0.02	9.96e-03	0.02	10,10,16	0.0	0.0	0.0	0,0,0
375	0.03	0.02	0.03	10,12,16	0.0	0.0	0.0	0,0,0
376	0.02	0.01	0.02	10,10,16	0.0	0.0	0.0	0,0,0
377	0.03	0.03	0.04	10,12,16	0.0	0.0	0.0	0,0,0
378	0.02	0.01	0.03	10,12,16	0.0	0.0	0.0	0,0,0
379	0.04	0.03	0.05	12,12,16	0.0	0.0	0.0	0,0,0
380	0.02	0.01	0.03	10,12,16	0.0	0.0	0.0	0,0,0
381	8.41e-03	0.02	0.01	12,10,16	0.0	0.0	0.0	0,0,0
382	0.02	0.01	0.02	12,12,16	0.0	0.0	0.0	0,0,0
383	8.36e-03	0.02	0.01	10,10,16	0.0	0.0	0.0	0,0,0
384	0.01	9.03e-03	0.01	10,10,16	0.0	0.0	0.0	0,0,0
385	8.66e-03	0.02	0.01	10,10,16	0.0	0.0	0.0	0,0,0
386	8.79e-03	9.44e-03	0.01	10,10,16	0.0	0.0	0.0	0,0,0
387	0.01	0.01	0.01	12,10,16	0.0	0.0	0.0	0,0,0
388	9.61e-03	9.19e-03	0.01	10,10,16	0.0	0.0	0.0	0,0,0
389	0.01	0.01	0.02	12,10,16	0.0	0.0	0.0	0,0,0
390	0.01	8.03e-03	0.02	10,10,16	0.0	0.0	0.0	0,0,0
391	0.02	0.01	0.02	10,10,16	0.0	0.0	0.0	0,0,0
392	0.01	8.49e-03	0.02	10,10,16	0.0	0.0	0.0	0,0,0
393	0.02	0.01	0.03	10,10,16	0.0	0.0	0.0	0,0,0
394	0.02	9.94e-03	0.02	10,10,16	0.0	0.0	0.0	0,0,0
395	0.03	0.02	0.03	10,12,16	0.0	0.0	0.0	0,0,0
396	0.02	0.01	0.02	10,10,16	0.0	0.0	0.0	0,0,0
397	0.03	0.03	0.04	10,12,16	0.0	0.0	0.0	0,0,0
398	0.02	0.01	0.03	10,12,16	0.0	0.0	0.0	0,0,0
399	0.04	0.03	0.05	12,12,16	0.0	0.0	0.0	0,0,0
400	0.02	0.01	0.03	10,12,16	0.0	0.0	0.0	0,0,0
401	0.01	9.00e-03	0.02	10,10,16	0.0	0.0	0.0	0,0,0
402	0.01	8.27e-03	0.02	10,10,16	0.0	0.0	0.0	0,0,0
403	0.01	8.76e-03	0.02	10,10,16	0.0	0.0	0.0	0,0,0
404	0.01	8.17e-03	0.02	10,10,16	0.0	0.0	0.0	0,0,0
405	0.01	8.43e-03	0.02	10,10,16	0.0	0.0	0.0	0,0,0
406	0.01	7.61e-03	0.02	10,10,16	0.0	0.0	0.0	0,0,0
407	0.01	7.78e-03	0.02	10,10,16	0.0	0.0	0.0	0,0,0
408	0.01	6.76e-03	0.01	10,10,16	0.0	0.0	0.0	0,0,0
409	0.01	6.84e-03	0.01	10,10,16	0.0	0.0	0.0	0,0,0
410	9.39e-03	5.78e-03	0.01	10,10,16	0.0	0.0	0.0	0,0,0
411	9.31e-03	5.72e-03	0.01	10,10,16	0.0	0.0	0.0	0,0,0
412	7.75e-03	4.81e-03	0.01	10,10,16	0.0	0.0	0.0	0,0,0
413	7.47e-03	4.59e-03	9.94e-03	10,10,16	0.0	0.0	0.0	0,0,0
414	6.60e-03	3.79e-03	8.75e-03	10,10,16	0.0	0.0	0.0	0,0,0
415	9.53e-03	5.34e-03	0.01	10,10,16	0.0	0.0	0.0	0,0,0
416	9.90e-03	5.19e-03	0.01	10,10,16	0.0	0.0	0.0	0,0,0
417	0.01	7.69e-03	0.02	12,12,16	0.0	0.0	0.0	0,0,0
418	0.02	8.49e-03	0.02	12,12,16	0.0	0.0	0.0	0,0,0
419	0.02	0.02	0.03	12,12,16	0.0	0.0	0.0	0,0,0
420	0.02	0.02	0.03	12,12,16	0.0	0.0	0.0	0,0,0
421	0.02	0.02	0.03	12,12,16	0.0	0.0	0.0	0,0,0
422	0.02	0.02	0.03	12,12,16	0.0	0.0	0.0	0,0,0
423	0.01	7.68e-03	0.02	12,12,16	0.0	0.0	0.0	0,0,0
424	0.02	8.48e-03	0.02	12,12,16	0.0	0.0	0.0	0,0,0

425	9.53e-03	5.31e-03	0.01	10,10,16	0.0	0.0	0.0	0,0,0
426	9.90e-03	5.19e-03	0.01	10,10,16	0.0	0.0	0.0	0,0,0
427	7.46e-03	4.59e-03	9.93e-03	10,10,16	0.0	0.0	0.0	0,0,0
428	6.60e-03	3.79e-03	8.75e-03	10,10,16	0.0	0.0	0.0	0,0,0
429	9.32e-03	5.73e-03	0.01	10,10,16	0.0	0.0	0.0	0,0,0
430	7.75e-03	4.81e-03	0.01	10,10,16	0.0	0.0	0.0	0,0,0
431	0.01	6.85e-03	0.01	10,10,16	0.0	0.0	0.0	0,0,0
432	9.39e-03	5.78e-03	0.01	10,10,16	0.0	0.0	0.0	0,0,0
433	0.01	7.77e-03	0.02	10,10,16	0.0	0.0	0.0	0,0,0
434	0.01	6.76e-03	0.01	10,10,16	0.0	0.0	0.0	0,0,0
435	0.01	8.42e-03	0.02	10,10,16	0.0	0.0	0.0	0,0,0
436	0.01	7.60e-03	0.02	10,10,16	0.0	0.0	0.0	0,0,0
437	0.01	8.74e-03	0.02	10,10,16	0.0	0.0	0.0	0,0,0
438	0.01	8.17e-03	0.02	10,10,16	0.0	0.0	0.0	0,0,0
439	0.01	8.98e-03	0.02	10,10,16	0.0	0.0	0.0	0,0,0
440	0.01	8.26e-03	0.02	10,10,16	0.0	0.0	0.0	0,0,0
441	0.02	9.41e-03	0.02	10,10,16	0.0	0.0	0.0	0,0,0
442	0.02	0.01	0.03	12,12,16	0.0	0.0	0.0	0,0,0
443	0.02	9.33e-03	0.02	10,10,16	0.0	0.0	0.0	0,0,0
444	0.02	0.01	0.03	12,12,16	0.0	0.0	0.0	0,0,0
445	0.01	8.52e-03	0.02	10,10,16	0.0	0.0	0.0	0,0,0
446	0.02	0.01	0.03	10,10,16	0.0	0.0	0.0	0,0,0
447	0.01	7.39e-03	0.02	10,10,16	0.0	0.0	0.0	0,0,0
448	0.02	9.15e-03	0.02	10,10,16	0.0	0.0	0.0	0,0,0
449	0.01	6.21e-03	0.01	10,10,16	0.0	0.0	0.0	0,0,0
450	0.01	7.55e-03	0.02	10,12,16	0.0	0.0	0.0	0,0,0
451	8.39e-03	5.06e-03	0.01	10,12,16	0.0	0.0	0.0	0,0,0
452	0.01	6.21e-03	0.02	10,12,16	0.0	0.0	0.0	0,0,0
453	6.67e-03	3.98e-03	8.86e-03	10,12,16	0.0	0.0	0.0	0,0,0
454	8.74e-03	5.00e-03	0.01	10,12,16	0.0	0.0	0.0	0,0,0
455	9.96e-03	5.25e-03	0.01	10,10,16	0.0	0.0	0.0	0,0,0
456	9.68e-03	5.19e-03	0.01	10,10,16	0.0	0.0	0.0	0,0,0
457	0.02	9.24e-03	0.02	12,12,16	0.0	0.0	0.0	0,0,0
458	0.02	9.09e-03	0.02	12,12,16	0.0	0.0	0.0	0,0,0
459	0.02	0.02	0.03	10,12,16	0.0	0.0	0.0	0,0,0
460	0.02	0.02	0.03	10,12,16	0.0	0.0	0.0	0,0,0
461	0.02	0.02	0.03	10,12,16	0.0	0.0	0.0	0,0,0
462	0.02	0.02	0.03	10,12,16	0.0	0.0	0.0	0,0,0
463	0.02	9.23e-03	0.02	12,12,16	0.0	0.0	0.0	0,0,0
464	0.02	9.09e-03	0.02	12,12,16	0.0	0.0	0.0	0,0,0
465	9.95e-03	5.25e-03	0.01	10,10,16	0.0	0.0	0.0	0,0,0
466	9.68e-03	5.19e-03	0.01	10,10,16	0.0	0.0	0.0	0,0,0
467	6.68e-03	3.98e-03	8.86e-03	10,12,16	0.0	0.0	0.0	0,0,0
468	8.73e-03	5.00e-03	0.01	10,12,16	0.0	0.0	0.0	0,0,0
469	8.38e-03	5.06e-03	0.01	10,12,16	0.0	0.0	0.0	0,0,0
470	0.01	6.20e-03	0.02	10,12,16	0.0	0.0	0.0	0,0,0
471	0.01	6.21e-03	0.01	10,10,16	0.0	0.0	0.0	0,0,0
472	0.01	7.55e-03	0.02	10,12,16	0.0	0.0	0.0	0,0,0
473	0.01	7.39e-03	0.02	10,10,16	0.0	0.0	0.0	0,0,0
474	0.02	9.14e-03	0.02	10,10,16	0.0	0.0	0.0	0,0,0
475	0.01	8.51e-03	0.02	10,10,16	0.0	0.0	0.0	0,0,0
476	0.02	0.01	0.03	10,10,16	0.0	0.0	0.0	0,0,0
477	0.02	9.32e-03	0.02	10,10,16	0.0	0.0	0.0	0,0,0
478	0.02	0.01	0.03	12,12,16	0.0	0.0	0.0	0,0,0
479	0.02	9.41e-03	0.02	10,10,16	0.0	0.0	0.0	0,0,0
480	0.02	0.01	0.03	12,12,16	0.0	0.0	0.0	0,0,0
481	0.04	0.03	0.05	12,12,16	0.0	0.0	0.0	0,0,0
482	0.16	0.39	0.20	12,12,16	0.0	0.0	0.0	0,0,0

483	0.04	0.05	0.05	12,12,16	0.0	0.0	0.0	0,0,0
				-OMISSIS-				
1841	0.11	0.22	0.15	12,12,16	0.0	0.0	0.0	0,0,0
1842	0.04	0.08	0.06	10,10,16	0.0	0.0	0.0	0,0,0
1843	0.04	0.08	0.06	10,10,16	0.0	0.0	0.0	0,0,0
1844	0.05	0.09	0.06	10,10,16	0.0	0.0	0.0	0,0,0
1845	0.04	0.08	0.05	10,10,16	0.0	0.0	0.0	0,0,0
1846	0.10	0.19	0.13	12,12,16	0.0	0.0	0.0	0,0,0
1847	0.08	0.15	0.10	12,12,16	0.0	0.0	0.0	0,0,0
1848	0.04	0.07	0.05	10,10,16	0.0	0.0	0.0	0,0,0
1849	0.05	0.09	0.06	10,10,16	0.0	0.0	0.0	0,0,0
1850	0.05	0.09	0.07	10,10,16	0.0	0.0	0.0	0,0,0
1851	0.05	0.09	0.06	10,10,16	0.0	0.0	0.0	0,0,0
1852	0.05	0.10	0.07	12,12,16	0.0	0.0	0.0	0,0,0
1853	0.06	0.11	0.08	10,10,16	0.0	0.0	0.0	0,0,0
1854	0.04	0.08	0.06	10,10,16	0.0	0.0	0.0	0,0,0
1855	0.08	0.14	0.10	10,10,16	0.0	0.0	0.0	0,0,0
1856	0.06	0.12	0.09	10,10,16	0.0	0.0	0.0	0,0,0
1857	0.05	0.09	0.06	10,10,16	0.0	0.0	0.0	0,0,0
1858	0.07	0.13	0.09	10,10,16	0.0	0.0	0.0	0,0,0
1859	0.04	0.08	0.06	10,10,16	0.0	0.0	0.0	0,0,0
1860	0.06	0.11	0.08	10,10,16	0.0	0.0	0.0	0,0,0
1861	0.03	0.08	0.04	10,10,16	0.0	0.0	0.0	0,0,0
1862	0.11	0.22	0.15	9,9,16	0.0	0.0	0.0	0,0,0
1863	0.02	0.04	0.02	9,9,16	0.0	0.0	0.0	0,0,0
1864	9.11e-03	0.03	0.01	10,10,16	0.0	0.0	0.0	0,0,0
1865	0.02	0.05	0.03	9,10,16	0.0	0.0	0.0	0,0,0
1866	0.02	0.04	0.02	10,10,16	0.0	0.0	0.0	0,0,0
1867	0.03	0.07	0.04	10,10,16	0.0	0.0	0.0	0,0,0
1868	0.03	0.06	0.03	10,10,16	0.0	0.0	0.0	0,0,0
1869	0.04	0.09	0.05	10,10,16	0.0	0.0	0.0	0,0,0
1870	0.03	0.08	0.05	10,10,16	0.0	0.0	0.0	0,0,0
1871	0.05	0.10	0.07	10,10,16	0.0	0.0	0.0	0,0,0
1872	0.04	0.09	0.06	10,10,16	0.0	0.0	0.0	0,0,0
1873	0.06	0.12	0.08	10,10,16	0.0	0.0	0.0	0,0,0
1874	0.05	0.11	0.07	10,10,16	0.0	0.0	0.0	0,0,0
1875	0.07	0.14	0.09	10,10,16	0.0	0.0	0.0	0,0,0
1876	0.06	0.13	0.09	10,10,16	0.0	0.0	0.0	0,0,0
1877	0.08	0.16	0.10	10,10,16	0.0	0.0	0.0	0,0,0
1878	0.07	0.15	0.10	10,10,16	0.0	0.0	0.0	0,0,0
1879	0.09	0.17	0.11	10,10,16	0.0	0.0	0.0	0,0,0
1880	0.08	0.16	0.11	10,10,16	0.0	0.0	0.0	0,0,0
1881	0.10	0.18	0.13	10,10,16	0.0	0.0	0.0	0,0,0
1882	0.09	0.18	0.12	10,10,16	0.0	0.0	0.0	0,0,0
1883	0.10	0.18	0.13	10,10,16	0.0	0.0	0.0	0,0,0
1884	0.09	0.18	0.12	10,10,16	0.0	0.0	0.0	0,0,0
1885	0.09	0.17	0.11	10,10,16	0.0	0.0	0.0	0,0,0
1886	0.08	0.16	0.11	10,10,16	0.0	0.0	0.0	0,0,0
1887	0.08	0.16	0.10	10,10,16	0.0	0.0	0.0	0,0,0
1888	0.07	0.15	0.10	10,10,16	0.0	0.0	0.0	0,0,0
1889	0.07	0.14	0.09	10,10,16	0.0	0.0	0.0	0,0,0
1890	0.06	0.13	0.09	10,10,16	0.0	0.0	0.0	0,0,0
1891	0.06	0.12	0.08	10,10,16	0.0	0.0	0.0	0,0,0
1892	0.05	0.11	0.07	10,10,16	0.0	0.0	0.0	0,0,0
1893	0.05	0.10	0.06	10,10,16	0.0	0.0	0.0	0,0,0
1894	0.04	0.09	0.06	10,10,16	0.0	0.0	0.0	0,0,0
1895	0.04	0.09	0.05	10,10,16	0.0	0.0	0.0	0,0,0
1896	0.03	0.08	0.05	10,10,16	0.0	0.0	0.0	0,0,0

1897	0.03	0.07	0.04	10,10,16	0.0	0.0	0.0	0,0,0
1898	0.03	0.06	0.03	10,10,16	0.0	0.0	0.0	0,0,0
1899	0.02	0.05	0.03	9,10,16	0.0	0.0	0.0	0,0,0
1900	0.02	0.04	0.02	10,10,16	0.0	0.0	0.0	0,0,0
1901	0.02	0.04	0.02	9,9,16	0.0	0.0	0.0	0,0,0
1902	9.12e-03	0.03	0.01	10,10,16	0.0	0.0	0.0	0,0,0
1903	0.05	0.10	0.07	10,10,16	0.0	0.0	0.0	0,0,0
1904	0.04	0.07	0.05	10,10,16	0.0	0.0	0.0	0,0,0
1905	0.09	0.18	0.13	10,10,16	0.0	0.0	0.0	0,0,0
1906	0.07	0.14	0.10	10,10,16	0.0	0.0	0.0	0,0,0
1907	0.03	0.07	0.04	10,10,16	0.0	0.0	0.0	0,0,0
1908	0.04	0.08	0.05	10,10,16	0.0	0.0	0.0	0,0,0
1909	0.06	0.12	0.08	10,10,16	0.0	0.0	0.0	0,0,0
1910	0.08	0.16	0.11	10,10,16	0.0	0.0	0.0	0,0,0
1911	0.09	0.18	0.13	10,10,16	0.0	0.0	0.0	0,0,0
1912	0.02	0.05	0.03	10,10,16	0.0	0.0	0.0	0,0,0
1913	0.05	0.10	0.07	12,10,16	0.0	0.0	0.0	0,0,0
1914	0.05	0.09	0.06	10,10,16	0.0	0.0	0.0	0,0,0
1915	0.05	0.10	0.07	10,10,16	0.0	0.0	0.0	0,0,0
1916	0.08	0.15	0.10	10,10,16	0.0	0.0	0.0	0,0,0
1917	0.04	0.08	0.05	12,10,16	0.0	0.0	0.0	0,0,0
1918	0.05	0.10	0.06	10,10,16	0.0	0.0	0.0	0,0,0
1919	0.10	0.19	0.13	10,10,16	0.0	0.0	0.0	0,0,0
1920	0.04	0.08	0.05	10,10,16	0.0	0.0	0.0	0,0,0
1921	0.05	0.10	0.06	10,10,16	0.0	0.0	0.0	0,0,0
1922	0.11	0.21	0.15	10,10,16	0.0	0.0	0.0	0,0,0
1923	0.04	0.08	0.06	10,10,16	0.0	0.0	0.0	0,0,0
1924	0.05	0.09	0.06	10,10,16	0.0	0.0	0.0	0,0,0
1925	0.12	0.23	0.16	10,10,16	0.0	0.0	0.0	0,0,0
1926	0.04	0.08	0.06	10,10,16	0.0	0.0	0.0	0,0,0
1927	0.04	0.08	0.05	10,10,16	0.0	0.0	0.0	0,0,0
1928	0.13	0.25	0.17	10,10,16	0.0	0.0	0.0	0,0,0
1929	0.05	0.09	0.06	10,10,16	0.0	0.0	0.0	0,0,0
1930	0.03	0.06	0.04	10,10,16	0.0	0.0	0.0	0,0,0
1931	0.13	0.25	0.18	10,10,16	0.0	0.0	0.0	0,0,0
1932	0.05	0.09	0.07	10,10,16	0.0	0.0	0.0	0,0,0
1933	0.02	0.04	0.03	10,10,16	0.0	0.0	0.0	0,0,0
1934	0.13	0.25	0.18	10,10,16	0.0	0.0	0.0	0,0,0
1935	0.05	0.10	0.07	10,10,16	0.0	0.0	0.0	0,0,0
1936	0.02	0.03	0.02	10,10,16	0.0	0.0	0.0	0,0,0
1937	0.13	0.25	0.18	10,10,16	0.0	0.0	0.0	0,0,0
1938	0.05	0.10	0.07	10,10,16	0.0	0.0	0.0	0,0,0
1939	0.02	0.03	0.02	10,10,16	0.0	0.0	0.0	0,0,0
1940	0.13	0.25	0.18	10,10,16	0.0	0.0	0.0	0,0,0
1941	0.05	0.10	0.07	10,10,16	0.0	0.0	0.0	0,0,0
1942	0.02	0.03	0.02	10,10,16	0.0	0.0	0.0	0,0,0
1943	0.13	0.25	0.18	10,10,16	0.0	0.0	0.0	0,0,0
1944	0.05	0.10	0.07	10,10,16	0.0	0.0	0.0	0,0,0
1945	0.02	0.03	0.02	10,10,16	0.0	0.0	0.0	0,0,0
1946	0.13	0.25	0.18	10,10,16	0.0	0.0	0.0	0,0,0
1947	0.05	0.10	0.07	10,10,16	0.0	0.0	0.0	0,0,0
1948	0.02	0.03	0.02	10,10,16	0.0	0.0	0.0	0,0,0
1949	0.13	0.25	0.18	10,10,16	0.0	0.0	0.0	0,0,0
1950	0.05	0.10	0.07	10,10,16	0.0	0.0	0.0	0,0,0
1951	0.02	0.03	0.02	10,10,16	0.0	0.0	0.0	0,0,0
1952	0.13	0.25	0.18	10,10,16	0.0	0.0	0.0	0,0,0
1953	0.05	0.10	0.07	10,10,16	0.0	0.0	0.0	0,0,0
1954	0.02	0.03	0.02	10,10,16	0.0	0.0	0.0	0,0,0

1955	0.13	0.25	0.18	10,10,16	0.0	0.0	0.0	0,0,0
1956	0.05	0.10	0.07	10,10,16	0.0	0.0	0.0	0,0,0
1957	0.02	0.03	0.02	10,10,16	0.0	0.0	0.0	0,0,0
1958	0.13	0.25	0.17	10,10,16	0.0	0.0	0.0	0,0,0
1959	0.05	0.10	0.07	10,10,16	0.0	0.0	0.0	0,0,0
1960	0.02	0.03	0.02	10,10,16	0.0	0.0	0.0	0,0,0
1961	0.13	0.25	0.17	10,10,16	0.0	0.0	0.0	0,0,0
1962	0.05	0.09	0.07	10,10,16	0.0	0.0	0.0	0,0,0
1963	0.02	0.04	0.03	10,10,16	0.0	0.0	0.0	0,0,0
1964	0.13	0.24	0.17	10,10,16	0.0	0.0	0.0	0,0,0
1965	0.05	0.09	0.06	10,10,16	0.0	0.0	0.0	0,0,0
1966	0.03	0.05	0.04	10,10,16	0.0	0.0	0.0	0,0,0
1967	0.12	0.23	0.16	10,10,16	0.0	0.0	0.0	0,0,0
1968	0.04	0.09	0.06	10,10,16	0.0	0.0	0.0	0,0,0
1969	0.04	0.07	0.05	10,10,16	0.0	0.0	0.0	0,0,0
1970	0.11	0.21	0.14	10,10,16	0.0	0.0	0.0	0,0,0
1971	0.04	0.08	0.06	10,10,16	0.0	0.0	0.0	0,0,0
1972	0.04	0.08	0.06	10,10,16	0.0	0.0	0.0	0,0,0
1973	0.09	0.18	0.12	12,12,16	0.0	0.0	0.0	0,0,0
1974	0.04	0.08	0.05	10,10,16	0.0	0.0	0.0	0,0,0
1975	0.05	0.09	0.06	10,10,16	0.0	0.0	0.0	0,0,0
1976	0.07	0.14	0.10	12,12,16	0.0	0.0	0.0	0,0,0
1977	0.04	0.07	0.05	10,10,16	0.0	0.0	0.0	0,0,0
1978	0.05	0.09	0.06	10,10,16	0.0	0.0	0.0	0,0,0
1979	0.07	0.14	0.10	10,10,16	0.0	0.0	0.0	0,0,0
1980	0.04	0.08	0.06	10,10,16	0.0	0.0	0.0	0,0,0
1981	0.06	0.11	0.08	10,10,16	0.0	0.0	0.0	0,0,0
1982	0.07	0.12	0.09	10,10,16	0.0	0.0	0.0	0,0,0
1983	0.04	0.08	0.06	10,10,16	0.0	0.0	0.0	0,0,0
1984	0.03	0.08	0.04	10,10,16	0.0	0.0	0.0	0,0,0
1985	0.09	0.19	0.12	10,10,16	0.0	0.0	0.0	0,0,0
1986	0.05	0.09	0.06	10,10,16	0.0	0.0	0.0	0,0,0
1987	0.05	0.10	0.07	10,10,16	0.0	0.0	0.0	0,0,0
1988	0.07	0.13	0.09	10,10,16	0.0	0.0	0.0	0,0,0
1989	0.05	0.09	0.07	10,10,16	0.0	0.0	0.0	0,0,0
1990	0.05	0.09	0.07	10,10,16	0.0	0.0	0.0	0,0,0
1991	0.05	0.10	0.06	12,12,16	0.0	0.0	0.0	0,0,0
1992	0.06	0.12	0.08	10,10,16	0.0	0.0	0.0	0,0,0
1993	0.09	0.18	0.13	10,10,16	0.0	0.0	0.0	0,0,0
1994	0.04	0.07	0.05	10,10,16	0.0	0.0	0.0	0,0,0
1995	0.04	0.08	0.05	10,10,16	0.0	0.0	0.0	0,0,0
1996	0.08	0.16	0.11	10,10,16	0.0	0.0	0.0	0,0,0
1997	0.07	0.14	0.10	10,10,16	0.0	0.0	0.0	0,0,0
1998	0.05	0.09	0.06	10,10,16	0.0	0.0	0.0	0,0,0
1999	0.03	0.07	0.04	10,10,16	0.0	0.0	0.0	0,0,0
2000	0.02	0.05	0.03	10,10,16	0.0	0.0	0.0	0,0,0
2001	0.09	0.18	0.13	10,10,16	0.0	0.0	0.0	0,0,0
2002	0.05	0.10	0.07	10,10,16	0.0	0.0	0.0	0,0,0
2003	0.05	0.09	0.06	10,10,16	0.0	0.0	0.0	0,0,0
2004	0.05	0.10	0.07	12,10,16	0.0	0.0	0.0	0,0,0
2005	0.05	0.10	0.06	10,10,16	0.0	0.0	0.0	0,0,0
2006	0.04	0.08	0.05	12,10,16	0.0	0.0	0.0	0,0,0
2007	0.08	0.15	0.10	10,10,16	0.0	0.0	0.0	0,0,0
2008	0.05	0.10	0.06	10,10,16	0.0	0.0	0.0	0,0,0
2009	0.04	0.08	0.05	10,10,16	0.0	0.0	0.0	0,0,0
2010	0.10	0.19	0.13	10,10,16	0.0	0.0	0.0	0,0,0
2011	0.05	0.09	0.06	10,10,16	0.0	0.0	0.0	0,0,0
2012	0.04	0.08	0.06	10,10,16	0.0	0.0	0.0	0,0,0

2013	0.11	0.21	0.15	10,10,16	0.0	0.0	0.0	0,0,0
2014	0.04	0.08	0.05	10,10,16	0.0	0.0	0.0	0,0,0
2015	0.04	0.08	0.06	10,10,16	0.0	0.0	0.0	0,0,0
2016	0.12	0.23	0.16	10,10,16	0.0	0.0	0.0	0,0,0
2017	0.03	0.06	0.04	10,10,16	0.0	0.0	0.0	0,0,0
2018	0.05	0.09	0.06	10,10,16	0.0	0.0	0.0	0,0,0
2019	0.13	0.25	0.17	10,10,16	0.0	0.0	0.0	0,0,0
2020	0.02	0.04	0.03	10,10,16	0.0	0.0	0.0	0,0,0
2021	0.05	0.09	0.07	10,10,16	0.0	0.0	0.0	0,0,0
2022	0.13	0.25	0.18	10,10,16	0.0	0.0	0.0	0,0,0
2023	0.02	0.03	0.02	10,10,16	0.0	0.0	0.0	0,0,0
2024	0.05	0.10	0.07	10,10,16	0.0	0.0	0.0	0,0,0
2025	0.13	0.25	0.18	10,10,16	0.0	0.0	0.0	0,0,0
2026	0.02	0.03	0.02	10,10,16	0.0	0.0	0.0	0,0,0
2027	0.05	0.10	0.07	10,10,16	0.0	0.0	0.0	0,0,0
2028	0.13	0.25	0.18	10,10,16	0.0	0.0	0.0	0,0,0
2029	0.02	0.03	0.02	10,10,16	0.0	0.0	0.0	0,0,0
2030	0.05	0.10	0.07	10,10,16	0.0	0.0	0.0	0,0,0
2031	0.13	0.25	0.18	10,10,16	0.0	0.0	0.0	0,0,0
2032	0.02	0.03	0.02	10,10,16	0.0	0.0	0.0	0,0,0
2033	0.05	0.10	0.07	10,10,16	0.0	0.0	0.0	0,0,0
2034	0.13	0.25	0.18	10,10,16	0.0	0.0	0.0	0,0,0
2035	0.02	0.03	0.02	10,10,16	0.0	0.0	0.0	0,0,0
2036	0.05	0.10	0.07	10,10,16	0.0	0.0	0.0	0,0,0
2037	0.13	0.25	0.18	10,10,16	0.0	0.0	0.0	0,0,0
2038	0.02	0.03	0.02	10,10,16	0.0	0.0	0.0	0,0,0
2039	0.05	0.10	0.07	10,10,16	0.0	0.0	0.0	0,0,0
2040	0.13	0.25	0.18	10,10,16	0.0	0.0	0.0	0,0,0
2041	0.02	0.03	0.02	10,10,16	0.0	0.0	0.0	0,0,0
2042	0.05	0.10	0.07	10,10,16	0.0	0.0	0.0	0,0,0
2043	0.13	0.25	0.18	10,10,16	0.0	0.0	0.0	0,0,0
2044	0.02	0.03	0.02	10,10,16	0.0	0.0	0.0	0,0,0
2045	0.05	0.10	0.07	10,10,16	0.0	0.0	0.0	0,0,0
2046	0.13	0.25	0.18	10,10,16	0.0	0.0	0.0	0,0,0
2047	0.02	0.03	0.02	10,10,16	0.0	0.0	0.0	0,0,0
2048	0.05	0.10	0.07	10,10,16	0.0	0.0	0.0	0,0,0
2049	0.13	0.25	0.17	10,10,16	0.0	0.0	0.0	0,0,0
2050	0.02	0.04	0.03	10,10,16	0.0	0.0	0.0	0,0,0
2051	0.05	0.09	0.07	10,10,16	0.0	0.0	0.0	0,0,0
2052	0.13	0.25	0.17	10,10,16	0.0	0.0	0.0	0,0,0
2053	0.03	0.05	0.04	10,10,16	0.0	0.0	0.0	0,0,0
2054	0.05	0.09	0.06	10,10,16	0.0	0.0	0.0	0,0,0
2055	0.13	0.24	0.17	10,10,16	0.0	0.0	0.0	0,0,0
2056	0.04	0.07	0.05	10,10,16	0.0	0.0	0.0	0,0,0
2057	0.04	0.09	0.06	10,10,16	0.0	0.0	0.0	0,0,0
2058	0.12	0.23	0.16	10,10,16	0.0	0.0	0.0	0,0,0
2059	0.04	0.08	0.06	10,10,16	0.0	0.0	0.0	0,0,0
2060	0.04	0.08	0.06	10,10,16	0.0	0.0	0.0	0,0,0
2061	0.11	0.21	0.14	10,10,16	0.0	0.0	0.0	0,0,0
2062	0.05	0.09	0.06	10,10,16	0.0	0.0	0.0	0,0,0
2063	0.04	0.08	0.05	10,10,16	0.0	0.0	0.0	0,0,0
2064	0.09	0.18	0.12	12,12,16	0.0	0.0	0.0	0,0,0
2065	0.05	0.09	0.06	10,10,16	0.0	0.0	0.0	0,0,0
2066	0.04	0.08	0.05	10,10,16	0.0	0.0	0.0	0,0,0
2067	0.07	0.14	0.10	12,12,16	0.0	0.0	0.0	0,0,0
2068	0.04	0.08	0.06	10,10,16	0.0	0.0	0.0	0,0,0
2069	0.07	0.13	0.10	10,10,16	0.0	0.0	0.0	0,0,0
2070	0.06	0.11	0.07	10,10,16	0.0	0.0	0.0	0,0,0

2071	0.05	0.09	0.06	10,10,16	0.0	0.0	0.0	0,0,0
2072	0.07	0.13	0.09	10,10,16	0.0	0.0	0.0	0,0,0
2073	0.09	0.19	0.12	10,10,16	0.0	0.0	0.0	0,0,0
2074	0.03	0.08	0.04	10,10,16	0.0	0.0	0.0	0,0,0
2075	0.07	0.12	0.09	10,10,16	0.0	0.0	0.0	0,0,0
2076	0.06	0.11	0.08	10,10,16	0.0	0.0	0.0	0,0,0
2077	0.04	0.08	0.06	10,10,16	0.0	0.0	0.0	0,0,0
2078	0.05	0.10	0.06	12,12,16	0.0	0.0	0.0	0,0,0
2079	0.05	0.09	0.06	10,10,16	0.0	0.0	0.0	0,0,0
2080	0.05	0.09	0.07	10,10,16	0.0	0.0	0.0	0,0,0
2081	0.34	0.48	0.45	10,10,16	0.0	0.0	0.0	0,0,0
2082	0.42	0.60	0.55	10,10,16	0.17	0.18	0.18	10,14,16
2083	0.30	0.43	0.40	10,10,16	0.0	0.0	0.0	0,0,0
2084	0.23	0.33	0.30	10,10,16	0.0	0.0	0.0	0,0,0
2085	0.26	0.37	0.34	10,10,16	0.0	0.0	0.0	0,0,0
2086	0.11	0.16	0.15	10,10,16	0.0	0.0	0.0	0,0,0
2087	0.29	0.41	0.38	10,10,16	0.0	0.0	0.0	0,0,0
2088	0.32	0.46	0.43	10,10,16	0.0	0.0	0.0	0,0,0
2089	0.27	0.39	0.37	10,10,16	0.0	0.0	0.0	0,0,0
2090	0.16	0.23	0.22	10,10,16	0.0	0.0	0.0	0,0,0
2091	0.35	0.51	0.47	10,10,16	0.14	0.14	0.14	10,14,16
2092	0.21	0.30	0.28	10,10,16	0.0	0.0	0.0	0,0,0
2093	0.08	0.11	0.10	10,10,16	0.0	0.0	0.0	0,0,0
2094	0.06	0.09	0.08	10,10,16	0.0	0.0	0.0	0,0,0
2095	0.13	0.19	0.17	10,10,16	0.0	0.0	0.0	0,0,0
2096	0.25	0.35	0.33	10,10,16	0.0	0.0	0.0	0,0,0
2097	0.35	0.51	0.47	10,10,16	0.14	0.14	0.14	10,14,16
2098	0.27	0.39	0.36	10,10,16	0.0	0.0	0.0	0,0,0
2099	0.33	0.47	0.44	10,10,16	0.0	0.0	0.0	0,0,0
2100	0.30	0.44	0.41	10,10,16	0.0	0.0	0.0	0,0,0
2101	0.14	0.20	0.19	10,10,16	0.0	0.0	0.0	0,0,0
2102	0.32	0.46	0.43	10,10,16	0.0	0.0	0.0	0,0,0
2103	0.18	0.26	0.24	10,10,16	0.0	0.0	0.0	0,0,0
2104	0.26	0.37	0.35	10,10,16	0.0	0.0	0.0	0,0,0
2105	0.23	0.34	0.31	10,10,16	0.0	0.0	0.0	0,0,0
2106	0.35	0.50	0.46	10,10,16	0.14	0.14	0.14	10,14,16
2107	0.06	0.08	0.07	10,10,16	0.0	0.0	0.0	0,0,0
2108	0.34	0.50	0.46	10,10,16	0.14	0.14	0.0	10,14,0
2109	0.25	0.35	0.33	10,10,16	0.0	0.0	0.0	0,0,0
2110	0.34	0.48	0.45	10,10,16	0.0	0.0	0.0	0,0,0
2111	0.29	0.42	0.39	10,10,16	0.0	0.0	0.0	0,0,0
2112	0.06	0.09	0.08	10,10,16	0.0	0.0	0.0	0,0,0
2113	0.33	0.48	0.44	10,10,16	0.0	0.0	0.0	0,0,0
2114	0.08	0.11	0.11	10,10,16	0.0	0.0	0.0	0,0,0
2115	0.41	0.58	0.54	10,10,16	0.16	0.17	0.17	10,14,16
2116	0.06	0.08	0.08	10,10,16	0.0	0.0	0.0	0,0,0
2117	0.16	0.22	0.21	10,10,16	0.0	0.0	0.0	0,0,0
2118	0.15	0.22	0.20	10,10,16	0.0	0.0	0.0	0,0,0
2119	0.27	0.39	0.36	10,10,16	0.0	0.0	0.0	0,0,0
2120	6.94e-03	9.99e-03	7.02e-03	12,12,16	0.0	0.0	0.0	0,0,0
2121	0.02	0.03	0.03	9,9,16	0.0	0.0	0.0	0,0,0
2122	0.02	0.04	0.03	10,10,16	0.0	0.0	0.0	0,0,0
2123	0.42	0.61	0.56	10,10,16	0.17	0.19	0.19	10,14,16
2124	0.02	0.03	0.03	9,9,16	0.0	0.0	0.0	0,0,0
2125	0.05	0.07	0.06	10,10,16	0.0	0.0	0.0	0,0,0
2126	0.05	0.08	0.07	10,10,16	0.0	0.0	0.0	0,0,0
2127	0.09	0.12	0.12	10,10,16	0.0	0.0	0.0	0,0,0
2128	8.19e-03	0.01	9.00e-03	12,12,16	0.0	0.0	0.0	0,0,0

2129	0.01	0.02	0.01	10,10,16	0.0	0.0	0.0	0,0,0
2130	0.04	0.06	0.05	10,10,16	0.0	0.0	0.0	0,0,0
2131	0.07	0.11	0.10	10,10,16	0.0	0.0	0.0	0,0,0
2132	0.07	0.10	0.09	10,10,16	0.0	0.0	0.0	0,0,0
2133	0.13	0.18	0.17	10,10,16	0.0	0.0	0.0	0,0,0
2134	9.86e-03	0.01	0.01	10,10,16	0.0	0.0	0.0	0,0,0
2135	0.02	0.03	0.03	9,9,16	0.0	0.0	0.0	0,0,0
2136	0.04	0.06	0.05	10,10,16	0.0	0.0	0.0	0,0,0
2137	0.02	0.02	0.02	9,9,16	0.0	0.0	0.0	0,0,0
2138	0.10	0.14	0.13	10,10,16	0.0	0.0	0.0	0,0,0
2139	0.02	0.02	0.03	9,9,16	0.0	0.0	0.0	0,0,0
2140	0.23	0.34	0.31	10,10,16	0.0	0.0	0.0	0,0,0
2141	0.02	0.03	0.03	9,9,16	0.0	0.0	0.0	0,0,0
2142	0.14	0.21	0.19	10,10,16	0.0	0.0	0.0	0,0,0
2143	0.40	0.58	0.53	10,10,16	0.16	0.17	0.17	10,14,16
2144	0.15	0.21	0.20	10,10,16	0.0	0.0	0.0	0,0,0
2145	0.12	0.18	0.16	10,10,16	0.0	0.0	0.0	0,0,0
2146	0.02	0.03	0.03	10,10,16	0.0	0.0	0.0	0,0,0
2147	0.02	0.02	0.03	9,9,16	0.0	0.0	0.0	0,0,0
2148	0.11	0.16	0.15	10,10,16	0.0	0.0	0.0	0,0,0
2149	0.34	0.49	0.45	10,10,16	0.0	0.0	0.0	0,0,0
2150	0.03	0.04	0.04	9,9,16	0.0	0.0	0.0	0,0,0
2151	0.14	0.21	0.19	10,10,16	0.0	0.0	0.0	0,0,0
2152	0.02	0.03	0.03	10,10,16	0.0	0.0	0.0	0,0,0
2153	0.04	0.06	0.05	10,10,16	0.0	0.0	0.0	0,0,0
2154	0.03	0.04	0.04	9,9,16	0.0	0.0	0.0	0,0,0
2155	0.02	0.02	0.02	9,9,16	0.0	0.0	0.0	0,0,0
2156	7.46e-03	0.01	9.17e-03	12,10,16	0.0	0.0	0.0	0,0,0
2157	0.07	0.11	0.10	10,10,16	0.0	0.0	0.0	0,0,0
2158	0.02	0.03	0.03	9,9,16	0.0	0.0	0.0	0,0,0
2159	0.04	0.05	0.05	10,10,16	0.0	0.0	0.0	0,0,0
2160	0.40	0.59	0.53	10,10,16	0.17	0.18	0.18	10,14,16
2161	0.07	0.10	0.09	10,10,16	0.0	0.0	0.0	0,0,0
2162	0.03	0.04	0.04	9,9,16	0.0	0.0	0.0	0,0,0
2163	0.09	0.13	0.12	10,10,16	0.0	0.0	0.0	0,0,0
2164	0.02	0.03	0.03	10,10,16	0.0	0.0	0.0	0,0,0
2165	7.44e-03	0.01	8.00e-03	12,12,16	0.0	0.0	0.0	0,0,0
2166	0.05	0.07	0.07	10,10,16	0.0	0.0	0.0	0,0,0
2167	0.02	0.03	0.03	9,9,16	0.0	0.0	0.0	0,0,0
2168	0.02	0.03	0.03	9,9,16	0.0	0.0	0.0	0,0,0
2169	0.12	0.18	0.16	10,10,16	0.0	0.0	0.0	0,0,0
2170	0.42	0.60	0.55	10,10,16	0.17	0.18	0.18	10,14,16
2171	8.22e-03	0.01	0.01	10,10,16	0.0	0.0	0.0	0,0,0
2172	0.01	0.02	0.02	10,10,16	0.0	0.0	0.0	0,0,0
2173	0.12	0.18	0.16	10,10,16	0.0	0.0	0.0	0,0,0
2174	8.04e-03	0.01	8.61e-03	12,12,16	0.0	0.0	0.0	0,0,0
2175	0.04	0.06	0.05	10,10,16	0.0	0.0	0.0	0,0,0
2176	0.30	0.44	0.40	10,10,16	0.0	0.0	0.0	0,0,0
2177	0.01	0.02	0.02	10,10,16	0.0	0.0	0.0	0,0,0
2178	0.02	0.02	0.02	9,9,16	0.0	0.0	0.0	0,0,0
2179	0.40	0.58	0.53	10,10,16	0.16	0.17	0.17	10,14,16
2180	0.05	0.08	0.07	10,10,16	0.0	0.0	0.0	0,0,0
2181	0.02	0.02	0.03	9,9,16	0.0	0.0	0.0	0,0,0
2182	0.10	0.14	0.13	10,10,16	0.0	0.0	0.0	0,0,0
2183	0.04	0.06	0.05	10,10,16	0.0	0.0	0.0	0,0,0
2184	0.07	0.10	0.09	10,10,16	0.0	0.0	0.0	0,0,0
2185	0.11	0.16	0.14	10,10,16	0.0	0.0	0.0	0,0,0
2186	0.02	0.03	0.03	9,9,16	0.0	0.0	0.0	0,0,0

2187	0.03	0.04	0.04	9,9,16	0.0	0.0	0.0	0,0,0
2188	0.14	0.21	0.19	10,10,16	0.0	0.0	0.0	0,0,0
2189	0.07	0.11	0.10	10,10,16	0.0	0.0	0.0	0,0,0
2190	0.03	0.04	0.03	10,10,16	0.0	0.0	0.0	0,0,0
2191	0.34	0.49	0.45	10,10,16	0.0	0.0	0.0	0,0,0
2192	0.12	0.18	0.16	10,10,16	0.0	0.0	0.0	0,0,0
2193	0.02	0.03	0.03	9,9,16	0.0	0.0	0.0	0,0,0
2194	0.02	0.02	0.02	9,9,16	0.0	0.0	0.0	0,0,0
2195	0.14	0.21	0.19	10,10,16	0.0	0.0	0.0	0,0,0
2196	7.65e-03	0.01	9.31e-03	12,10,16	0.0	0.0	0.0	0,0,0
2197	0.02	0.03	0.03	9,9,16	0.0	0.0	0.0	0,0,0
2198	0.04	0.06	0.05	10,10,16	0.0	0.0	0.0	0,0,0
2199	0.07	0.10	0.09	10,10,16	0.0	0.0	0.0	0,0,0
2200	0.04	0.06	0.05	10,10,16	0.0	0.0	0.0	0,0,0
2201	0.02	0.02	0.02	9,9,16	0.0	0.0	0.0	0,0,0
2202	0.07	0.11	0.10	10,10,16	0.0	0.0	0.0	0,0,0
2203	0.31	0.45	0.41	10,10,16	0.0	0.0	0.0	0,0,0
2204	0.39	0.57	0.53	10,10,16	0.16	0.17	0.17	10,14,16
2205	0.31	0.45	0.41	10,10,16	0.0	0.0	0.0	0,0,0
2206	0.39	0.57	0.53	10,10,16	0.16	0.17	0.17	10,14,16
2207	0.01	0.02	0.01	10,10,16	0.0	0.0	0.0	0,0,0
2208	0.07	0.10	0.09	10,10,16	0.0	0.0	0.0	0,0,0
2209	0.02	0.03	0.03	9,9,16	0.0	0.0	0.0	0,0,0
2210	9.76e-03	0.02	0.01	10,10,16	0.0	0.0	0.0	0,0,0
2211	0.10	0.14	0.13	10,10,16	0.0	0.0	0.0	0,0,0
2212	0.02	0.02	0.02	9,9,16	0.0	0.0	0.0	0,0,0
2213	0.06	0.08	0.07	10,10,16	0.0	0.0	0.0	0,0,0
2214	0.02	0.02	0.02	9,9,16	0.0	0.0	0.0	0,0,0
2215	0.37	0.53	0.49	10,10,16	0.15	0.15	0.15	10,14,16
2216	0.11	0.16	0.15	10,10,16	0.0	0.0	0.0	0,0,0
2217	0.13	0.18	0.17	10,10,16	0.0	0.0	0.0	0,0,0
2218	7.95e-03	0.01	8.81e-03	12,12,16	0.0	0.0	0.0	0,0,0
2219	0.31	0.46	0.42	10,10,16	0.0	0.0	0.0	0,0,0
2220	0.04	0.06	0.06	10,10,16	0.0	0.0	0.0	0,0,0
2221	0.11	0.16	0.14	10,10,16	0.0	0.0	0.0	0,0,0
2222	0.02	0.02	0.02	9,9,16	0.0	0.0	0.0	0,0,0
2223	0.09	0.12	0.11	10,10,16	0.0	0.0	0.0	0,0,0
2224	0.03	0.04	0.04	9,9,16	0.0	0.0	0.0	0,0,0
2225	0.02	0.02	0.02	9,9,16	0.0	0.0	0.0	0,0,0
2226	0.02	0.03	0.03	10,10,16	0.0	0.0	0.0	0,0,0
2227	0.04	0.06	0.05	9,9,16	0.0	0.0	0.0	0,0,0
2228	0.03	0.05	0.04	9,9,16	0.0	0.0	0.0	0,0,0
2229	0.05	0.07	0.06	10,10,16	0.0	0.0	0.0	0,0,0
2230	7.27e-03	0.01	7.95e-03	12,12,16	0.0	0.0	0.0	0,0,0
2231	7.18e-03	0.01	7.89e-03	12,12,16	0.0	0.0	0.0	0,0,0
2232	0.16	0.23	0.21	12,12,16	0.0	0.0	0.0	0,0,0
2233	0.03	0.04	0.04	9,9,16	0.0	0.0	0.0	0,0,0
2234	0.47	0.68	0.63	10,10,16	0.19	0.22	0.22	10,14,16
2235	0.40	0.57	0.53	10,10,16	0.16	0.17	0.17	10,14,16
2236	0.06	0.09	0.08	10,10,16	0.0	0.0	0.0	0,0,0
2237	0.02	0.03	0.03	9,9,16	0.0	0.0	0.0	0,0,0
2238	0.06	0.09	0.08	10,10,16	0.0	0.0	0.0	0,0,0
2239	0.14	0.20	0.18	10,10,16	0.0	0.0	0.0	0,0,0
2240	0.03	0.04	0.03	10,10,16	0.0	0.0	0.0	0,0,0
2241	0.12	0.18	0.16	10,10,16	0.0	0.0	0.0	0,0,0
2242	0.16	0.24	0.22	10,10,16	0.0	0.0	0.0	0,0,0
2243	0.10	0.15	0.14	10,10,16	0.0	0.0	0.0	0,0,0
2244	0.03	0.04	0.04	9,9,16	0.0	0.0	0.0	0,0,0

2245	0.02	0.02	0.02	9,9,16	0.0	0.0	0.0	0,0,0
2246	0.02	0.03	0.03	9,9,16	0.0	0.0	0.0	0,0,0
2247	6.73e-03	9.60e-03	7.38e-03	12,12,16	0.0	0.0	0.0	0,0,0
2248	0.02	0.03	0.03	9,9,16	0.0	0.0	0.0	0,0,0
2249	0.10	0.15	0.14	10,10,16	0.0	0.0	0.0	0,0,0
2250	0.16	0.24	0.22	10,10,16	0.0	0.0	0.0	0,0,0
2251	0.04	0.06	0.06	10,10,16	0.0	0.0	0.0	0,0,0
2252	0.06	0.08	0.07	10,10,16	0.0	0.0	0.0	0,0,0
2253	8.36e-03	0.01	9.23e-03	12,12,16	0.0	0.0	0.0	0,0,0
2254	0.02	0.03	0.03	9,9,16	0.0	0.0	0.0	0,0,0
2255	0.09	0.13	0.12	10,10,16	0.0	0.0	0.0	0,0,0
2256	0.02	0.03	0.03	9,9,16	0.0	0.0	0.0	0,0,0
2257	0.03	0.04	0.03	10,10,16	0.0	0.0	0.0	0,0,0
2258	0.08	0.12	0.11	10,10,16	0.0	0.0	0.0	0,0,0
2259	9.84e-03	0.02	0.01	10,10,16	0.0	0.0	0.0	0,0,0
2260	0.12	0.18	0.16	10,10,16	0.0	0.0	0.0	0,0,0
2261	7.09e-03	0.01	7.91e-03	12,12,16	0.0	0.0	0.0	0,0,0
2262	0.37	0.53	0.49	10,10,16	0.15	0.15	0.15	10,14,16
2263	0.07	0.10	0.09	10,10,16	0.0	0.0	0.0	0,0,0
2264	0.11	0.16	0.14	10,10,16	0.0	0.0	0.0	0,0,0
2265	0.13	0.18	0.17	10,10,16	0.0	0.0	0.0	0,0,0
2266	0.11	0.16	0.14	10,10,16	0.0	0.0	0.0	0,0,0
2267	0.14	0.20	0.18	10,10,16	0.0	0.0	0.0	0,0,0
2268	0.02	0.04	0.04	9,9,16	0.0	0.0	0.0	0,0,0
2269	0.02	0.03	0.03	10,10,16	0.0	0.0	0.0	0,0,0
2270	0.02	0.03	0.03	9,9,16	0.0	0.0	0.0	0,0,0
2271	0.03	0.04	0.04	10,10,16	0.0	0.0	0.0	0,0,0
2272	0.02	0.02	0.02	9,9,16	0.0	0.0	0.0	0,0,0
2273	7.52e-03	0.01	8.09e-03	12,12,16	0.0	0.0	0.0	0,0,0
2274	0.02	0.02	0.02	9,9,16	0.0	0.0	0.0	0,0,0
2275	0.01	0.02	0.01	10,10,16	0.0	0.0	0.0	0,0,0
2276	0.02	0.02	0.02	9,9,16	0.0	0.0	0.0	0,0,0
2277	0.47	0.68	0.63	10,10,16	0.19	0.22	0.22	10,14,16
2278	0.05	0.07	0.07	10,10,16	0.0	0.0	0.0	0,0,0
2279	0.06	0.08	0.08	10,10,16	0.0	0.0	0.0	0,0,0
2280	0.31	0.46	0.42	10,10,16	0.0	0.0	0.0	0,0,0
2281	0.04	0.05	0.05	9,9,16	0.0	0.0	0.0	0,0,0
2282	0.16	0.23	0.21	12,12,16	0.0	0.0	0.0	0,0,0
2283	0.10	0.15	0.14	10,10,16	0.0	0.0	0.0	0,0,0
2284	0.06	0.09	0.08	10,10,16	0.0	0.0	0.0	0,0,0
2285	0.40	0.57	0.53	10,10,16	0.16	0.17	0.17	10,14,16
2286	0.02	0.03	0.03	9,9,16	0.0	0.0	0.0	0,0,0
2287	0.03	0.04	0.04	9,9,16	0.0	0.0	0.0	0,0,0
2288	0.02	0.02	0.02	9,9,16	0.0	0.0	0.0	0,0,0
2289	0.02	0.03	0.03	9,9,16	0.0	0.0	0.0	0,0,0
2290	0.10	0.15	0.14	10,10,16	0.0	0.0	0.0	0,0,0
2291	0.02	0.03	0.03	9,9,16	0.0	0.0	0.0	0,0,0
2292	6.80e-03	9.69e-03	7.41e-03	12,12,16	0.0	0.0	0.0	0,0,0
2293	0.18	0.25	0.24	10,10,16	0.0	0.0	0.0	0,0,0
2294	0.08	0.12	0.11	12,12,16	0.0	0.0	0.0	0,0,0
2295	0.31	0.44	0.41	10,10,16	0.0	0.0	0.0	0,0,0
2296	0.15	0.22	0.21	10,10,16	0.0	0.0	0.0	0,0,0
2297	0.24	0.35	0.33	10,10,16	0.0	0.0	0.0	0,0,0
2298	0.06	0.08	0.08	10,10,16	0.0	0.0	0.0	0,0,0
2299	0.29	0.42	0.39	10,10,16	0.0	0.0	0.0	0,0,0
2300	0.36	0.53	0.49	10,10,16	0.15	0.15	0.15	10,14,16
2301	0.34	0.49	0.46	10,10,16	0.0	0.14	0.14	0,14,16
2302	0.38	0.55	0.52	10,10,16	0.16	0.16	0.16	10,14,16

2303	0.36	0.52	0.48	10,10,16	0.15	0.15	0.15	10,14,16
2304	0.23	0.33	0.31	10,10,16	0.0	0.0	0.0	0,0,0
2305	0.37	0.53	0.49	10,10,16	0.15	0.15	0.15	10,14,16
2306	0.06	0.09	0.08	10,10,16	0.0	0.0	0.0	0,0,0
2307	0.33	0.47	0.44	10,10,16	0.0	0.0	0.0	0,0,0
2308	0.14	0.20	0.18	10,10,16	0.0	0.0	0.0	0,0,0
2309	0.26	0.37	0.35	10,10,16	0.0	0.0	0.0	0,0,0
2310	0.16	0.22	0.21	10,10,16	0.0	0.0	0.0	0,0,0
2311	0.06	0.08	0.08	10,10,16	0.0	0.0	0.0	0,0,0
2312	0.28	0.41	0.38	10,10,16	0.0	0.0	0.0	0,0,0
2313	0.27	0.39	0.36	10,10,16	0.0	0.0	0.0	0,0,0
2314	0.36	0.53	0.49	10,10,16	0.15	0.15	0.15	10,14,16
2315	0.16	0.22	0.21	10,10,16	0.0	0.0	0.0	0,0,0
2316	0.31	0.44	0.41	10,10,16	0.0	0.0	0.0	0,0,0
2317	0.33	0.47	0.44	10,10,16	0.0	0.0	0.0	0,0,0
2318	0.37	0.53	0.49	10,10,16	0.15	0.15	0.15	10,14,16
2319	0.26	0.37	0.35	10,10,16	0.0	0.0	0.0	0,0,0
2320	0.23	0.33	0.31	10,10,16	0.0	0.0	0.0	0,0,0
2321	0.18	0.25	0.24	10,10,16	0.0	0.0	0.0	0,0,0
2322	0.16	0.23	0.22	10,10,16	0.0	0.0	0.0	0,0,0
2323	0.36	0.52	0.48	10,10,16	0.15	0.15	0.15	10,14,16
2324	0.25	0.35	0.33	10,10,16	0.0	0.0	0.0	0,0,0
2325	0.06	0.08	0.07	10,10,16	0.0	0.0	0.0	0,0,0
2326	0.08	0.12	0.11	12,12,16	0.0	0.0	0.0	0,0,0
2327	0.29	0.42	0.39	10,10,16	0.0	0.0	0.0	0,0,0
2328	0.15	0.21	0.20	10,10,16	0.0	0.0	0.0	0,0,0
2329	0.34	0.49	0.46	10,10,16	0.0	0.14	0.14	0,14,16
2330	0.07	0.28	0.09	10,10,16	0.0	0.0	0.0	0,0,0
2331	0.03	0.07	0.04	10,10,16	0.0	0.0	0.0	0,0,0
2332	0.10	0.15	0.13	12,12,16	0.0	0.0	0.0	0,0,0
2333	0.04	0.10	0.05	10,10,16	0.0	0.0	0.0	0,0,0
2334	0.04	0.08	0.05	10,10,16	0.0	0.0	0.0	0,0,0
2335	0.05	0.07	0.06	12,12,16	0.0	0.0	0.0	0,0,0
2336	0.03	0.07	0.04	10,10,16	0.0	0.0	0.0	0,0,0
2337	0.04	0.07	0.05	10,10,16	0.0	0.0	0.0	0,0,0
2338	0.03	0.07	0.03	10,10,16	0.0	0.0	0.0	0,0,0
2339	0.03	0.09	0.05	10,10,16	0.0	0.0	0.0	0,0,0
2340	0.08	0.14	0.10	12,10,16	0.0	0.0	0.0	0,0,0
2341	0.17	0.21	0.22	12,10,16	0.0	0.0	0.0	0,0,0
2342	0.04	0.09	0.05	10,10,16	0.0	0.0	0.0	0,0,0
2343	0.03	0.07	0.04	10,10,16	0.0	0.0	0.0	0,0,0
2344	0.04	0.08	0.05	10,10,16	0.0	0.0	0.0	0,0,0
2345	0.09	0.14	0.12	12,12,16	0.0	0.0	0.0	0,0,0
2346	0.05	0.06	0.06	12,10,16	0.0	0.0	0.0	0,0,0
2347	0.04	0.08	0.05	10,10,16	0.0	0.0	0.0	0,0,0
2348	0.19	0.25	0.25	12,12,16	0.0	0.0	0.0	0,0,0
2349	0.03	0.07	0.04	12,10,16	0.0	0.0	0.0	0,0,0
2350	0.03	0.07	0.04	10,10,16	0.0	0.0	0.0	0,0,0
2351	0.03	0.07	0.04	10,10,16	0.0	0.0	0.0	0,0,0
2352	0.09	0.17	0.12	10,10,16	0.0	0.0	0.0	0,0,0
2353	0.03	0.06	0.04	10,10,16	0.0	0.0	0.0	0,0,0
2354	0.18	0.23	0.23	12,12,16	0.0	0.0	0.0	0,0,0
2355	0.03	0.07	0.04	10,10,16	0.0	0.0	0.0	0,0,0
2356	0.03	0.07	0.04	10,10,16	0.0	0.0	0.0	0,0,0
2357	0.03	0.09	0.04	10,10,16	0.0	0.0	0.0	0,0,0
2358	0.03	0.08	0.04	10,10,16	0.0	0.0	0.0	0,0,0
2359	0.04	0.09	0.05	10,10,16	0.0	0.0	0.0	0,0,0
2360	0.04	0.06	0.05	12,10,16	0.0	0.0	0.0	0,0,0

2361	0.28	0.40	0.37	12,12,16	0.09	0.09	0.09	12,15,16
2362	0.04	0.06	0.05	12,10,16	0.0	0.0	0.0	0,0,0
2363	0.03	0.07	0.04	10,10,16	0.0	0.0	0.0	0,0,0
2364	0.03	0.07	0.04	10,10,16	0.0	0.0	0.0	0,0,0
2365	0.22	0.29	0.28	12,12,16	0.0	0.0	0.0	0,0,0
2366	0.03	0.07	0.04	10,10,16	0.0	0.0	0.0	0,0,0

Guscio	**rRfck**	**rRfyk**	**rPfck**	**wR**	**wF**	**wP**
	0.47	0.68	0.63	0.19	0.22	0.22

19. CONCLUSIONI E SCHEMI GRAFICI

STATO LIMITE ULTIMO E STATO LIMITE DI SALVAGUARDIA DELLA VITA (SLU E SLV)

La struttura risulta verificata in ogni parte secondo quanto richiesto dalla normativa vigente.
Nelle figure seguenti sono riportati i principali risultati e le verifiche riguardanti gli elementi strutturali.

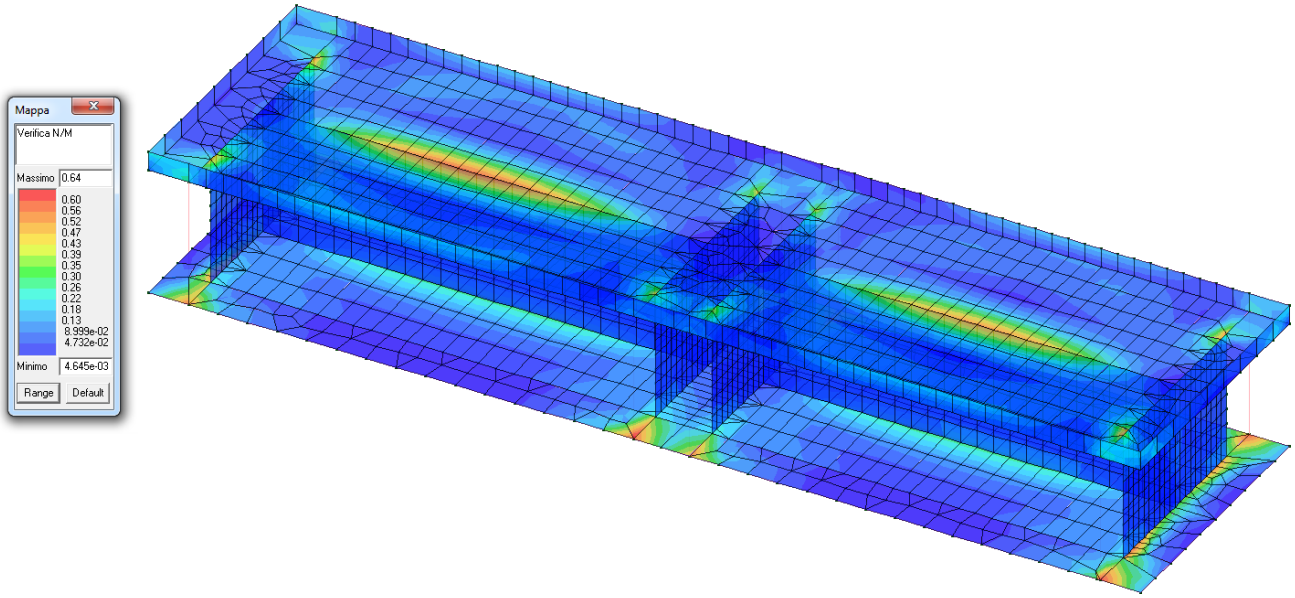

Figura 19.1 - Verifica N/M globale struttura in c.a. - Verifiche soddisfatte

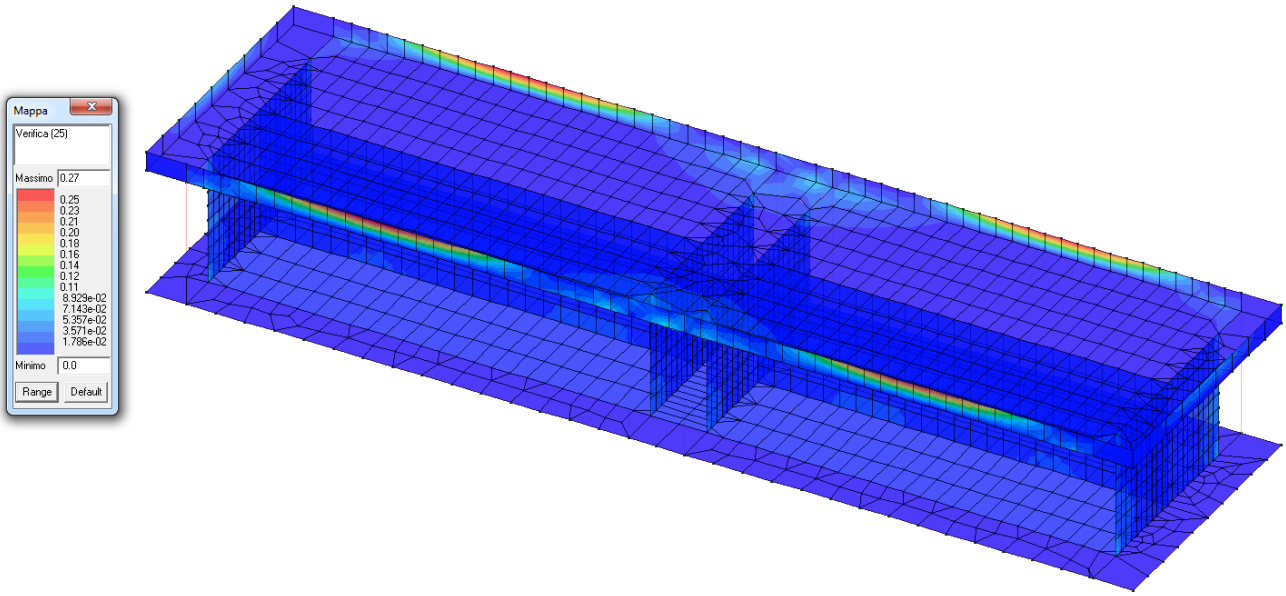

Figura 19.2 – Verifica Ned/Ncr globale struttura in c.a.. - Verifiche soddisfatte

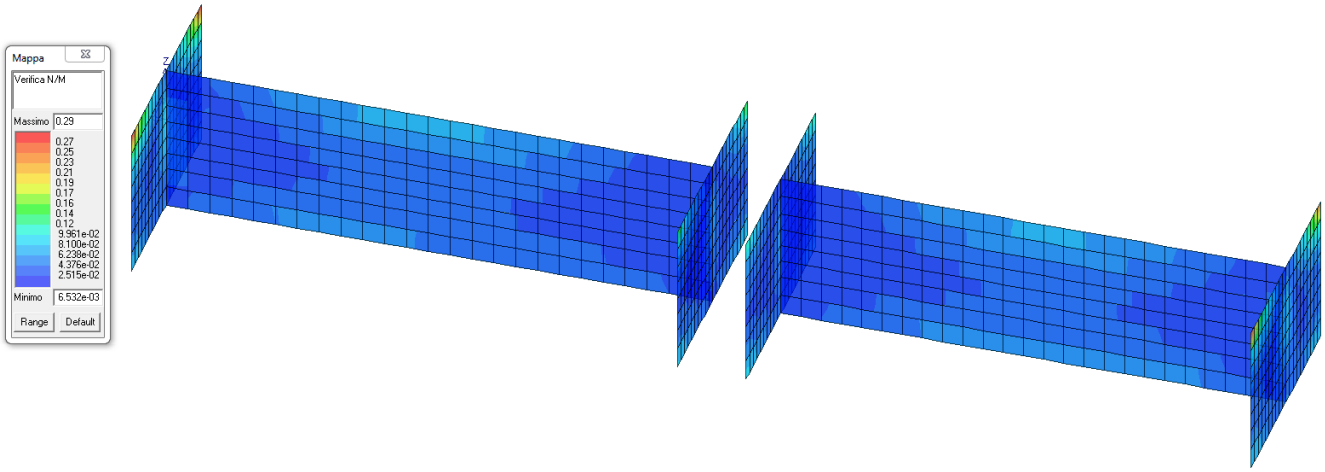

Figura 19.3 - Verifica N/M setti in c.a. - Verifiche soddisfatte

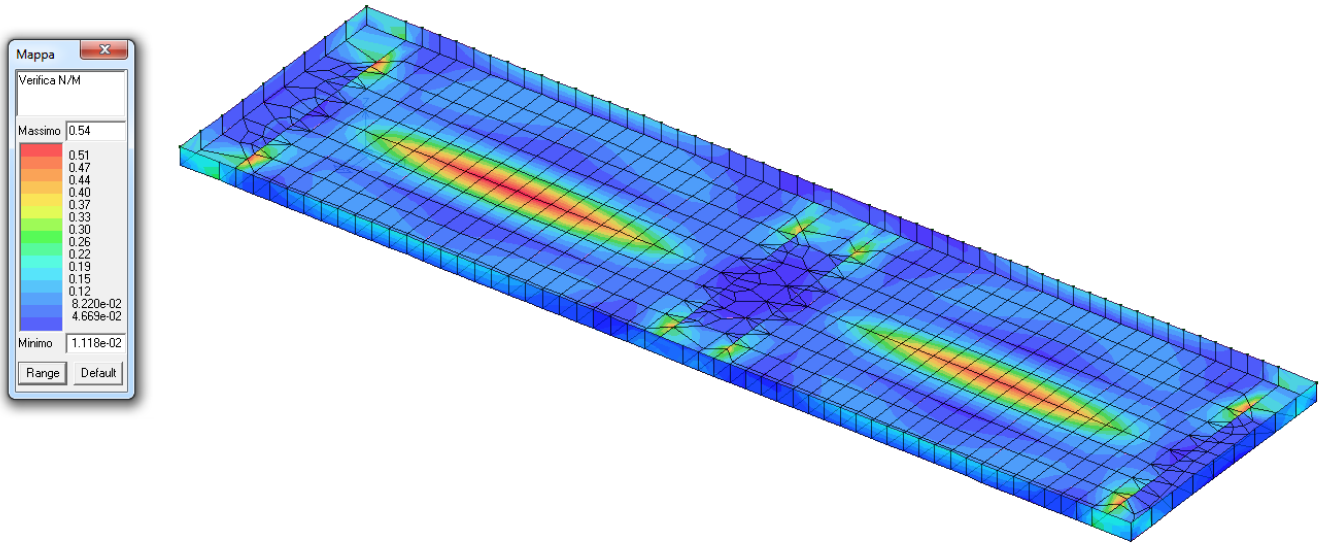

Figura 19.4 – Verifica N/M soletta di copertura in c.a.. - Verifiche soddisfatte

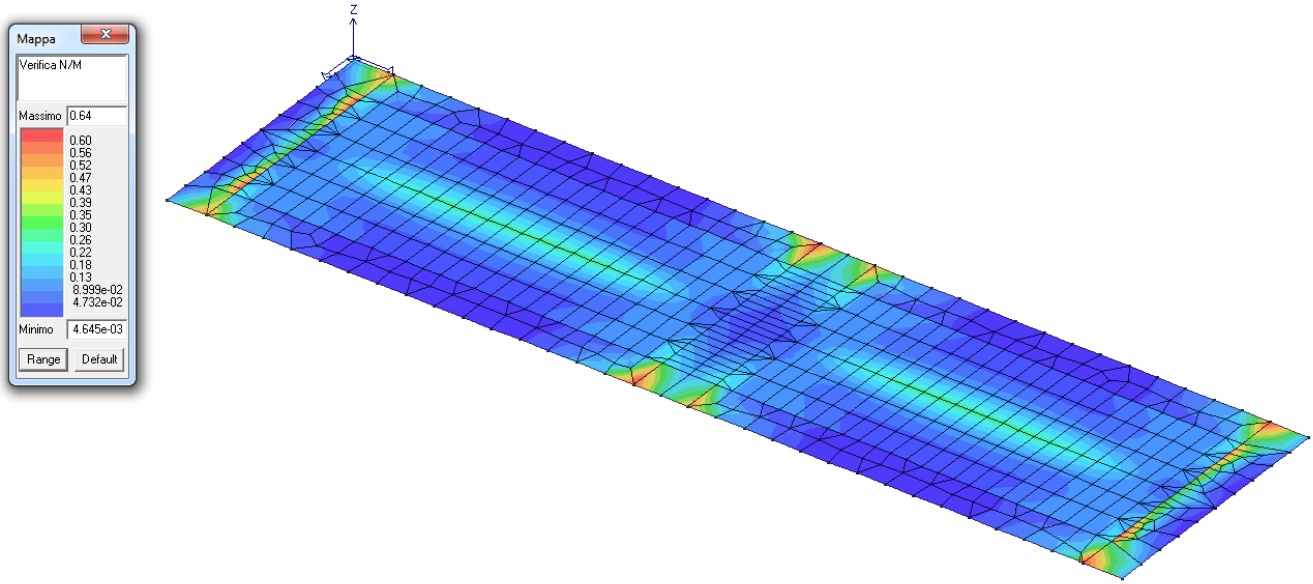

Figura 19.5 – Verifica N/M platea di fondazione in c.a.. - Verifiche soddisfatte

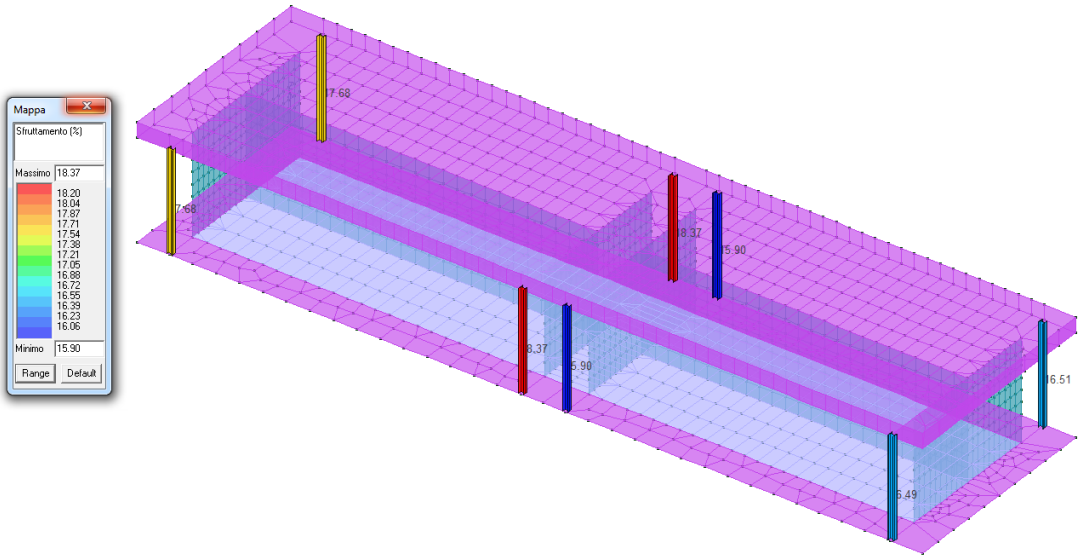

Figura 19.6 - Percentuale di sfruttamento elementi in carpenteria metallica - Verifiche soddisfatte

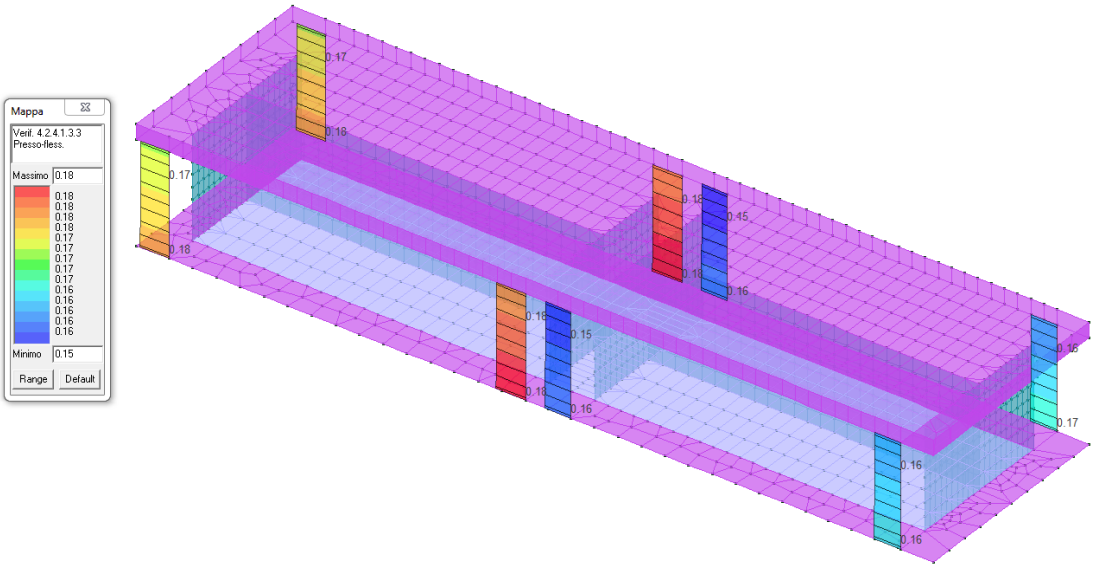

Figura 19.7 – Verifica a Pressoflessione elementi in carpenteria metallica - Verifiche soddisfatte

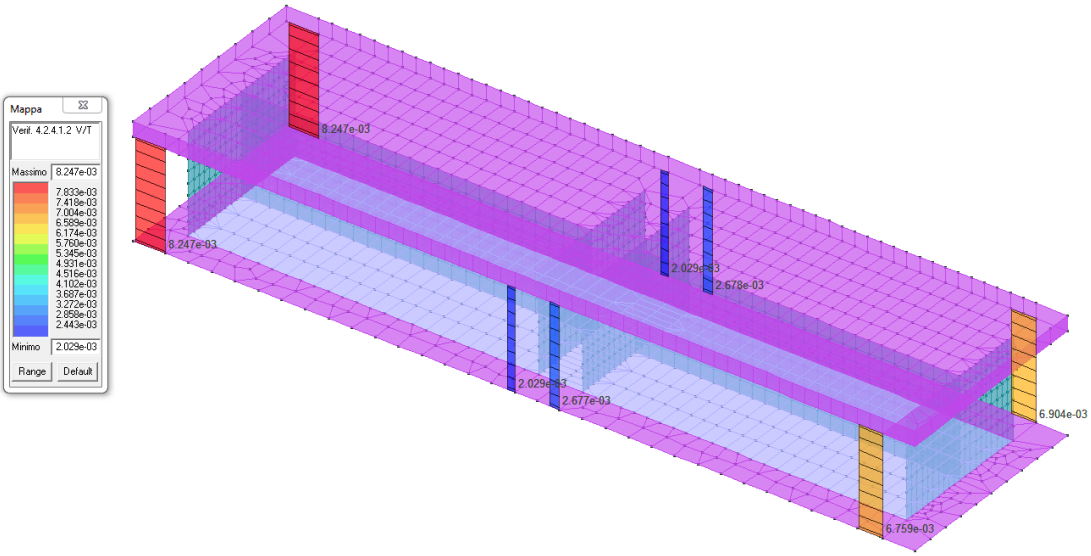

Figura 19.8 –Verifiche a taglio elementi in carpenteria metallica - Verifiche soddisfatta

STATO LIMITE DI ESERCIZIO E DI DANNO (SLE ED SLD)

La struttura risulta verificata in ogni parte secondo quanto richiesto dalla normativa vigente.
Nelle figure seguenti sono riportati i principali risultati e le verifiche riguardanti gli elementi strutturali.

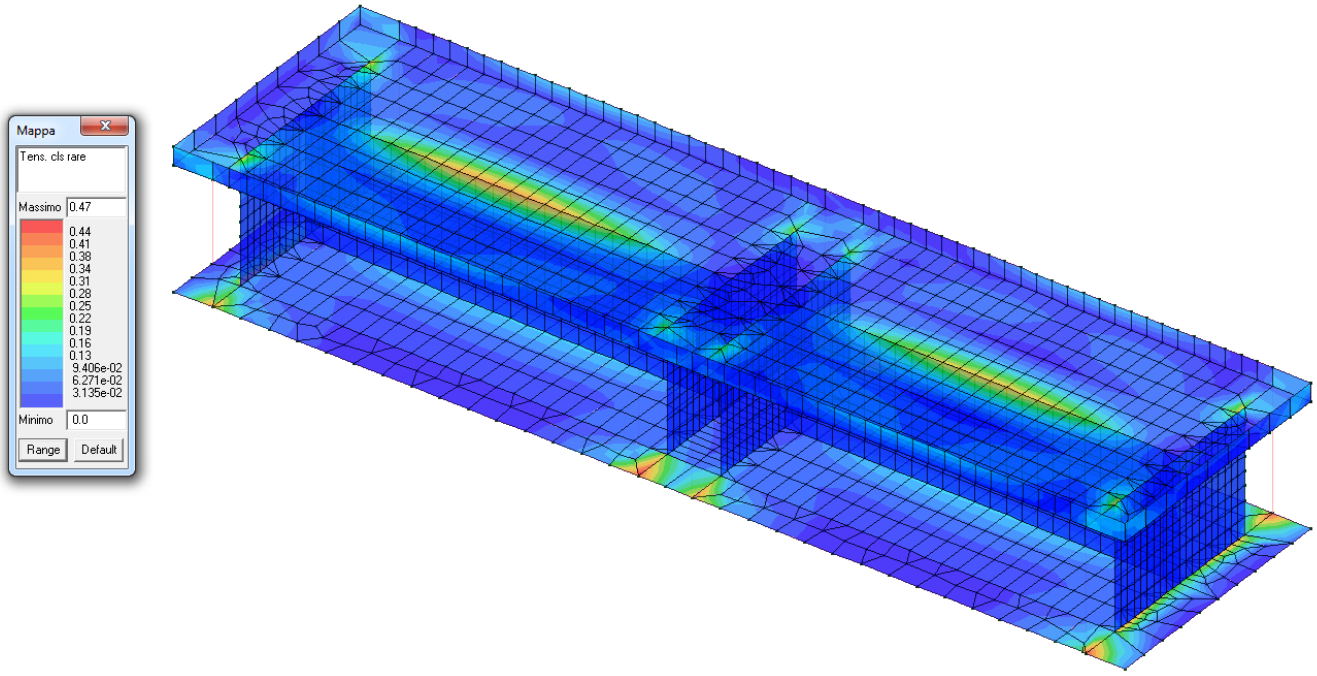

Figura 19.9 - Tensioni cls in combinazione rara - Verifiche soddisfatte

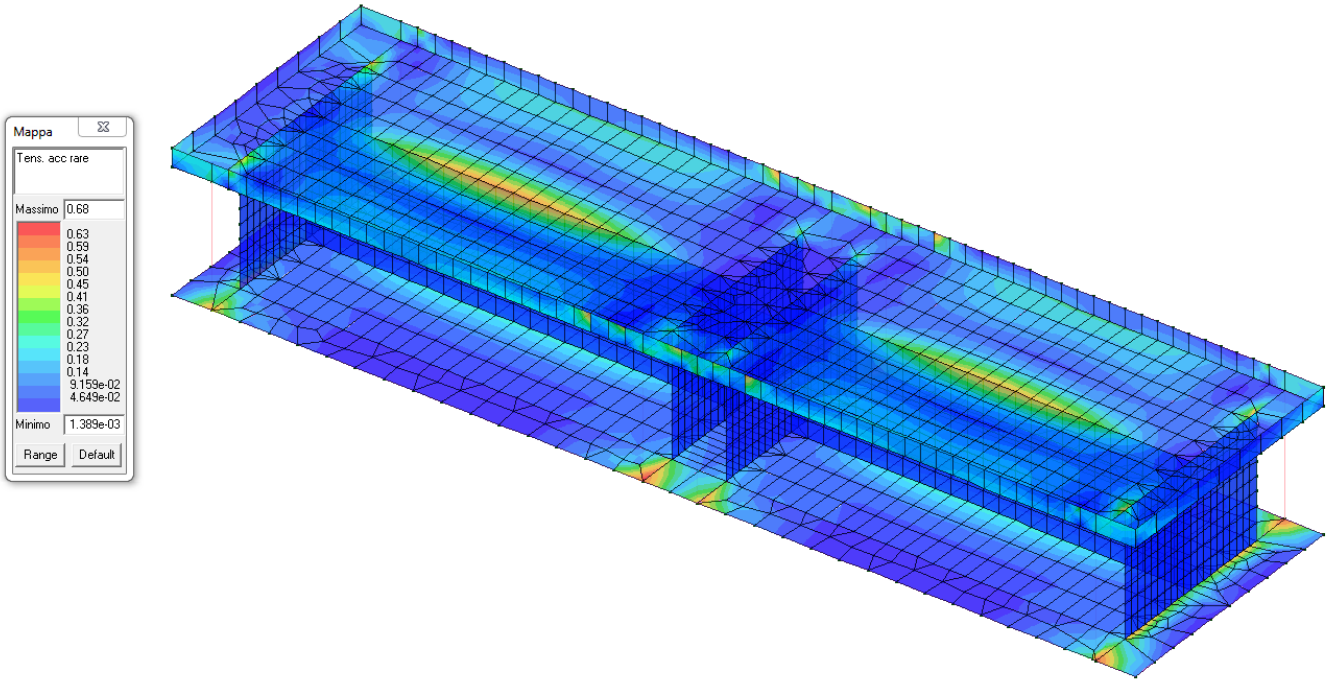

Figura 19.10 – Tensioni acciaio in combinazione rara - Verifiche soddisfatte

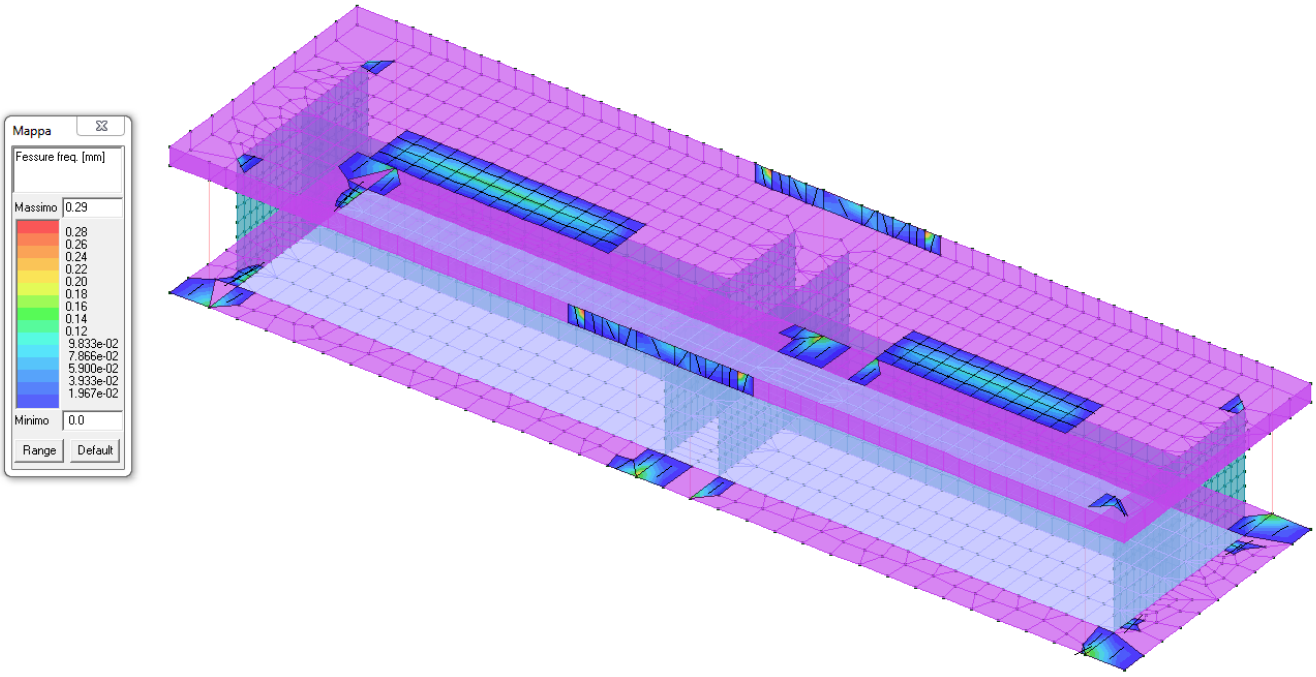

Figura 19.11 – Verifica a fessurazione in combinazione SLE frequente - Verifica Soddisfatta

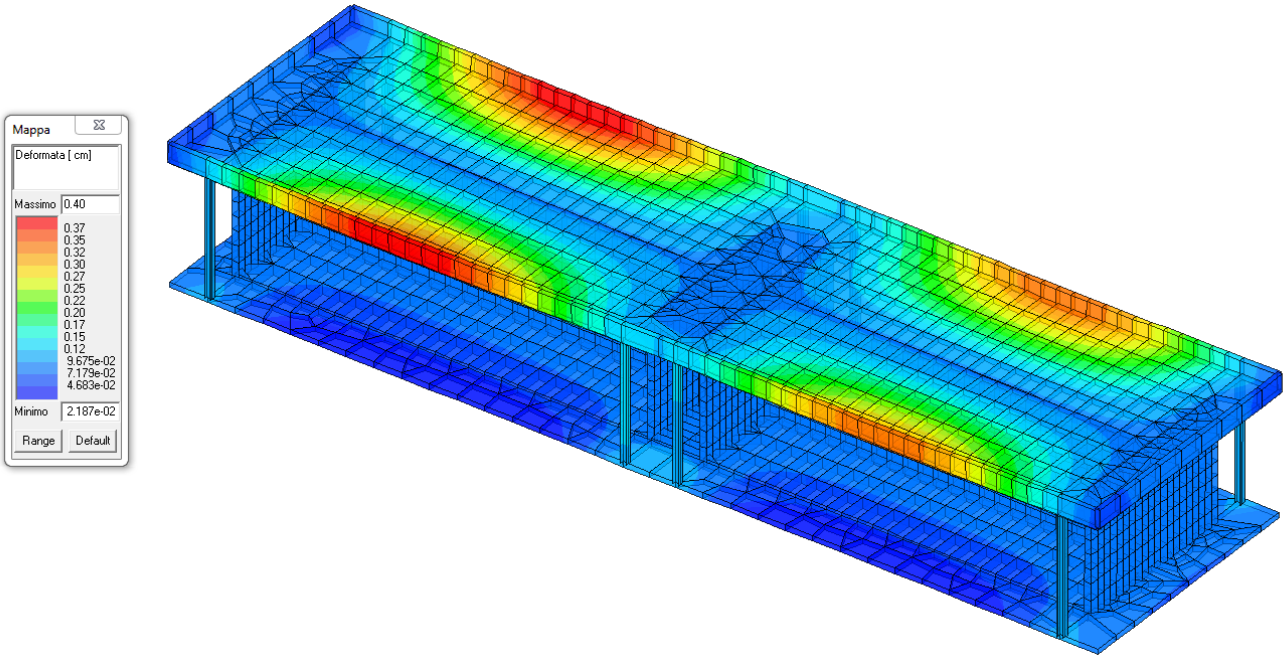

Figura 19.12 – Spostamento massimo verticale allo SLE combinazione rara

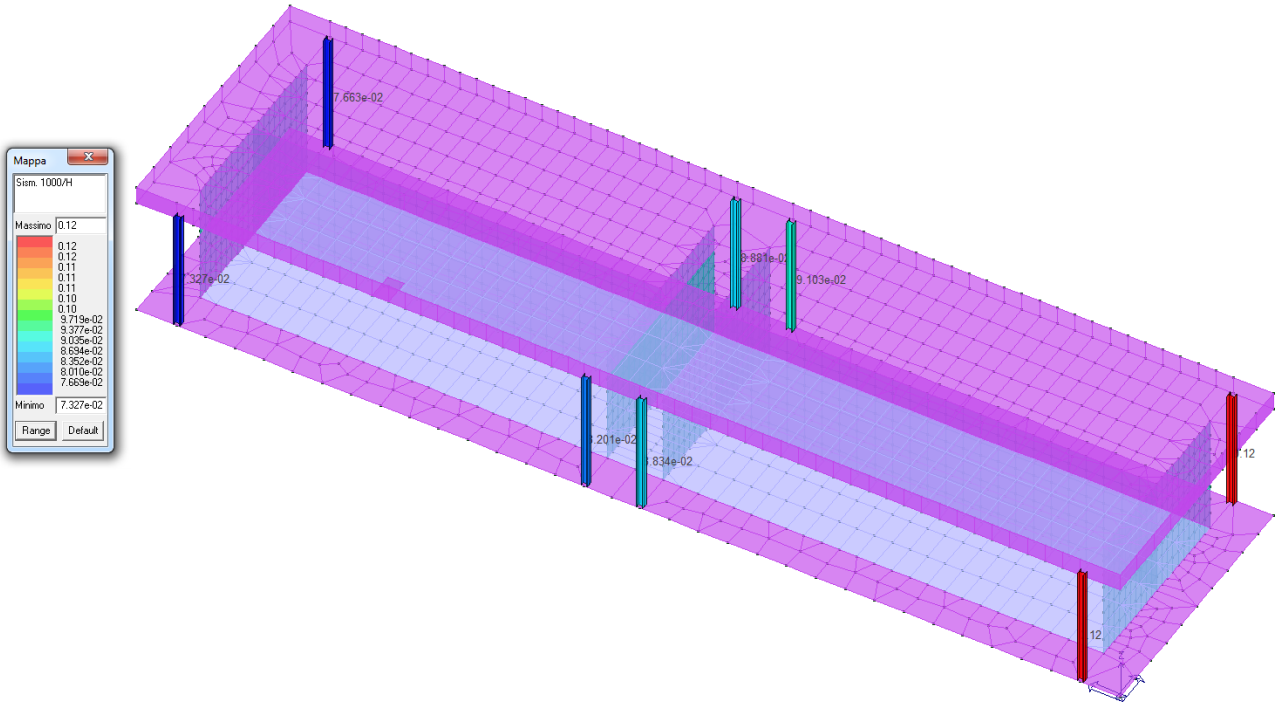

Figura 19.13 – Verifica spostamenti allo SLD - Verifica Soddisfatta

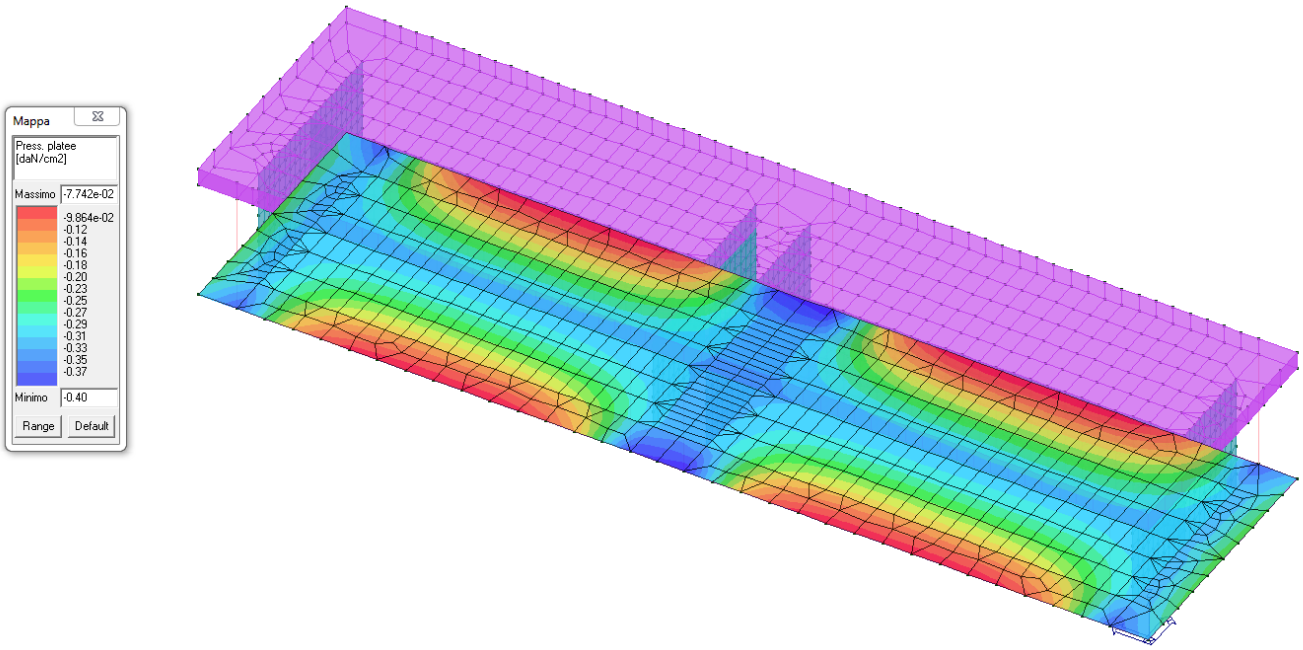

Figura 19.14 – Pressione di scarico platea di fondazione - terreno

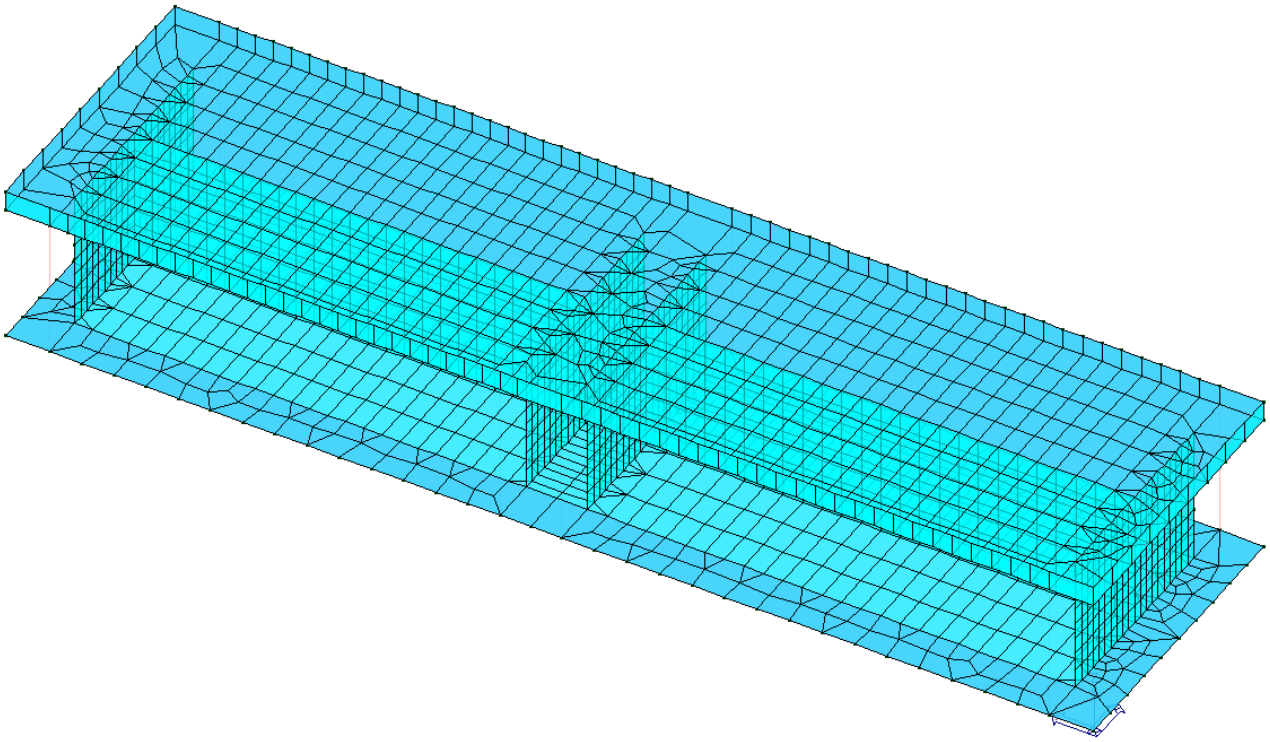

Figura 19.15 – Stato di progetto SLU - Tutti gli elementi risultano verificati (colore azzurro)

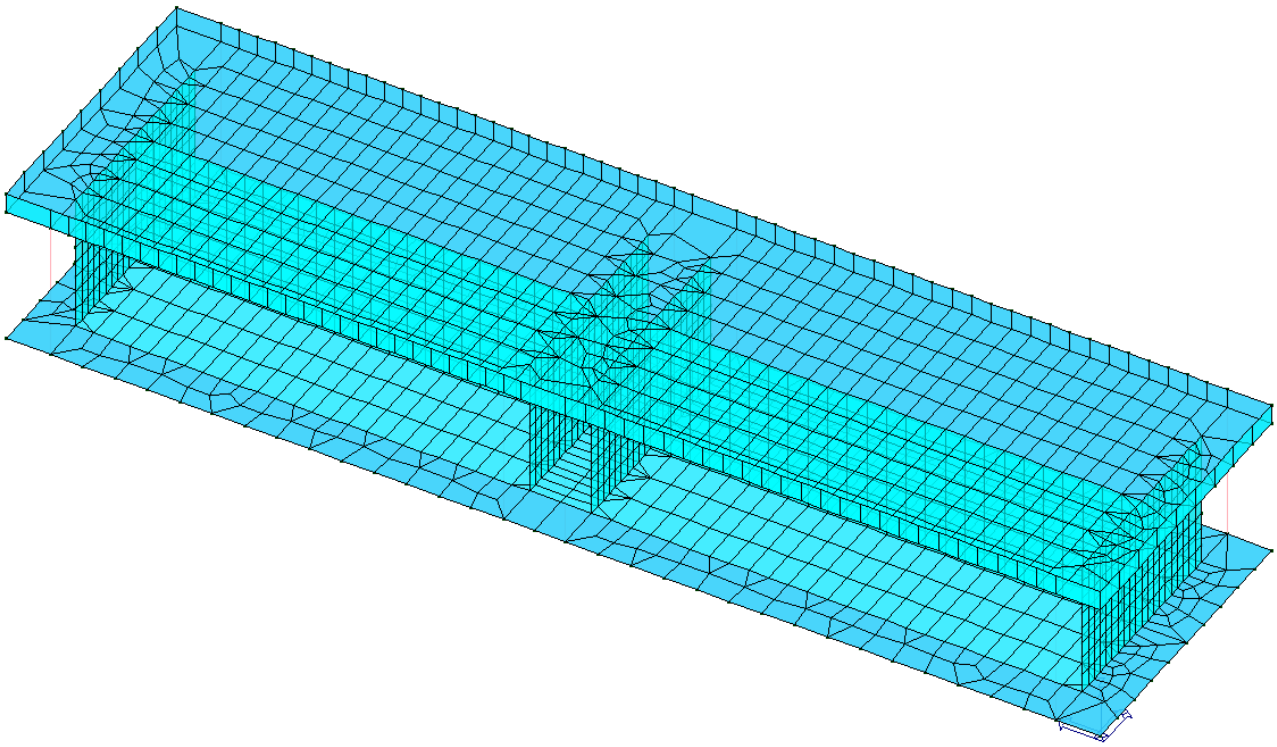

Figura 19.16 – Stato di progetto SLE - Tutti gli elementi risultano verificati (colore azzurro)

FINE DOCUMENTO

Torino, il 23/03/2018

IL SOGGETTO TECNICO INCARICATO

TECSE ENGINEERING Studio Associato

Corso Monte Cucco 73/c – 10141 - Torino

www.tecse-engineering.com – tecnico@tecse-engineering.com

IL PROFESSIONISTA FIRMATARIO

Ing. Fabrizio Betta

Legale Rappresentante di TECSE ENGINEERING Studio Associato

Iscritto all'Albo dell'Ordine degli Ingegneri della Provincia di Torino

n.9932F